PVM-1953MD/2053MD

SERVICE MANUAL

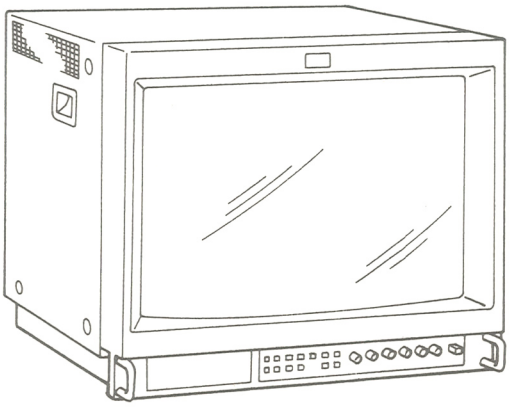

US Model
Canadian Model
PVM-1953MD
Chassis No. SCC-H31A-A

AEP Model
PVM-2053MD
Chassis No. SCC-H29B-A

SPECIFICATIONS (PVM-1953MD)

Video signal

Color system	NTSC, PAL
Resolution	600 TV lines
Aperture correction	0 dB – +6.0 dB
Frequency response	LINE 9.0 MHz (–3 dB) RGB 10.0 MHz (–3 dB)
Synchronization	AFC time constant 1.0 msec.

Picture performance

Overscan	20% overscan of CRT effective screen area
Normal scan	7% overscan of CRT effective screen area
Underscan	5% underscan of CRT effective screen area
Linearity	Horizontal: Less than 5% (typical) Vertical: Less than 5% (typical)
Convergence	Central area 0.7 mm (typical) Peripheral area 1.3 mm (typical)
Raster size stability	H 1.0%, V 1.5%
High voltage regulation	4.0%
CRT	SMPTE-C phosphor
Color temperature	6500K/5600K/USER (3200K – 10000K, factory setting is 6500K)

Inputs

Y/C IN	4-pin mini DIN connector *See the pin assignment on the page 2.*
VIDEO IN	BNC connector 1Vp-p ±6 dB, sync negative
AUDIO IN	phono jack, –5 dBu, more than 47k ohms
R/R-Y IN, G/Y IN, B/B-Y IN	BNC connector
R, G, B channels	0.7 Vp-p ±6 dB
Sync on green	1.0 Vp-p Sync negative, 75 ohms terminated

— Continued on next page —

MICROFILM

TRINITRON® COLOR VIDEO MONITOR

SONY®

R-Y, B-Y channels	0.7 Vp-p ±6 dB
Y channel	1.0 Vp-p ±6 dB (Standard color bar signal of 75% chrominance)
EXT SYNC IN	BNC connector composite sync 4 Vp-p ±6 dB, negative

Outputs

Y/C OUT	4-pin mini DIN connector, 75 ohms terminated
VIDEO OUT	BNC connector, 75 ohms terminated
AUDIO OUT	phono jack
R/R-Y OUT, G/Y OUT, B/B-Y OUT	BNC connector, 75 ohms terminated
EXT SYNC OUT	BNC connector, 75 ohms terminated
DC OUT	5 V/1 A
Speaker output	Output level 0.8 W

Remote input

REMOTE 1	8-pin mini DIN *See the pin assignment on the page 2.*
RS-232C	9-pin D-sub *See the pin assignment on the page 2.*

General

Power requirements	120 V AC, 50/60 Hz 1.6 A *Capable of 100 to 240V operation*
Operating temperature range	0 – 35°C
Storage temperature range	–10 – +40°C
Humidity	0 – 90%
Dimensions	Approx. 450 × 457.5 × 503 mm (w/h/d) (17 3/4 × 18 1/8 × 19 7/8 inches) not incl. projecting parts and controls
Mass	Approx. 30 kg (66 lb 2 oz)
Accessory supplied	AC power cord (1) AC plug holder (1) Splash proof covers (2) Control panel cover (1) Panel hinges (2) Remote Control Connector 8-pin mini DIN (1) Operating Instructions (1) Interface Manual for Programmers (1) Quick Reference Card (1) Double-sided adhesive tapes (4)

0 dBu = 0.775 Vr.m.s.

Design and specifications are subject to change without notice.

Pin assignment

Y/C IN connector (4-pin mini DIN)

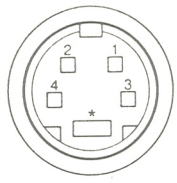

Pin No.	Signal	Description
1	Y-input	1 Vp-p, sync negative, 75 ohms
2	CHROMA sub-carrier-input	300 mVp-p, burst Delay time between Y and C: within 0±100 nsec., 75 ohms
3	GND for Y-input	GND
4	GND for CHROMA-input	GND

REMOTE 1 connector (8-pin mini DIN)

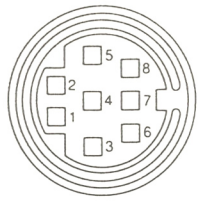

Pin No.	Signal
1	REMOTE ON/OFF
2	LINE A
3	GND
4	LINE B
5	TALLY
6	OVER SCAN
7	RGB A
8	RGB B

RS-232C connector (9-pin D-sub)

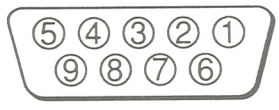

Pin No.	Signal
1	—
2	RX
3	TX
4	—
5	GND
6	—
7	RTS
8	CTS
9	—

SPECIFICATIONS (PVM-2053MD)

Video signal

Color system	PAL, NTSC
Resolution	600 TV lines
Aperture correction	0 dB – +6.0 dB
Frequency response	LINE 9.0 MHz (–3 dB) RGB 10.0 MHz (–3 dB)
Synchronization	AFC time constant 1.0 msec.

Picture performance

Overscan	20% overscan of CRT effective screen area
Normal scan	7% overscan of CRT effective screen area
Underscan	5% underscan of CRT effective screen area
Linearity	Horizontal: Less than 5% (typical) Vertical: Less than 5% (typical)
Convergence	Central area 0.7 mm (typical) Peripheral area 1.3 mm (typical)
Raster size stability	H 1.0%, V 1.5%
High voltage regulation	4.0%
CRT	EBU phosphor
Color temperature	6500K/5600K/USER (3200K – 10000K, factory setting is 6500K)

Inputs

Y/C IN	4-pin mini DIN connector *See the pin assignment on the page 3.*
VIDEO IN	BNC connector 1 Vp-p ±6 dB, sync negative
AUDIO IN	phono jack, –5 dBu, more than 47k ohms
R/R-Y IN, G/Y IN, B/B-Y IN	BNC connector
R, G, B channels	0.7 Vp-p ±6 dB
Sync on green	1.0 Vp-p Sync negative, 75 ohms terminated
R-Y, B-Y channels	0.7 Vp-p ±6 dB
Y channel	1.0 Vp-p ±6 dB (Standard color bar signal of 75% chrominance)
EXT SYNC IN	BNC connector composite sync 4 Vp-p ±6 dB, negative

Outputs

Y/C OUT	4-pin mini DIN connector, 75 ohms terminated
VIDEO OUT	BNC connector, 75 ohms terminated
AUDIO OUT	phono jack
R/R-Y OUT, G/Y OUT, B/B-Y OUT	BNC connector, 75 ohms terminated
EXT SYNC OUT	BNC connector, 75 ohms terminated
DC OUT	5 V/1 A
Speaker output	Output level 0.8 W

Remote input

REMOTE 1	8-pin mini DIN *See the pin assignment on the page 4.*
RS-232C	9-pin D-sub *See the pin assignment on the page 4.*

General

Power requirements	100 – 240 V AC, 50/60 Hz 1.2 – 0.5A
Operating temperature range	0 – 35°C
Storage temperature range	–10 – +40°C
Humidity	0 – 90%
Dimensions	Approx. 450 × 457.5 × 503 mm (w/h/d) (17 3/4 × 18 1/8 × 19 7/8 inches) not incl. projecting parts and controls
Mass	Approx. 30 kg (66 lb 2 oz)
Accessory supplied	AC power cord (1) AC plug holder (1) Splash proof covers (2) Control panel cover (1) Panel hinges (2) Remote Control Connector 8-pin mini DIN (1) Instructions for use (1) Interface Manual for Programmers (1) Quick Reference Card (1) Double-sided Adhesive Tapes (4) Sales Companies Guide (1)

0 dBu = 0.775 Vr.m.s.

Pin assignment

Y/C IN connector (4-pin mini DIN)

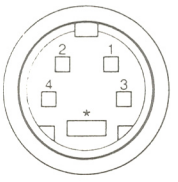

Pin No.	Signal	Description
1	Y-input	1 Vp-p, sync negative, 75 ohms
2	CHROMA sub-carrier-input	300 mVp-p, burst Delay time between Y and C: within 0±100 nsec., 75 ohms
3	GND for Y-input	GND
4	GND for CHROMA-input	GND

REMOTE 1 connector (8-pin mini DIN)

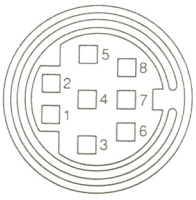

Pin No.	Signal
1	REMOTE ON/OFF
2	LINE A
3	GND
4	LINE B
5	TALLY
6	OVER SCAN
7	RGB A
8	RGB B

RS-232C connector (9-pin D-sub)

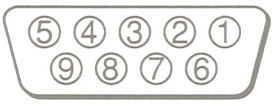

Pin No.	Signal
1	—
2	RX
3	TX
4	—
5	GND
6	—
7	RTS
8	CTS
9	—

Design and specifications are subject to change without notice.

(CAUTION)

SHORT CIRCUIT THE ANODE OF THE PICTURE TUBE AND THE ANODE CAP TO THE METAL CHASSIS, CRT SHIELD, OR CARBON PAINTED ON THE CRT, AFTER REMOVING THE ANODE.

WARNING!!

AN ISOLATION TRANSFORMER SHOULD BE USED DURING ANY SERVICE TO AVOID POSSIBLE SHOCK HAZARD, BECAUSE OF LIVE CHASSIS.

THE CHASSIS OF THIS RECEIVER IS DIRECTLY CONNECTED TO THE AC POWER LINE.

SAFETY-RELATED COMPONENT WARNING!!

COMPONENTS IDENTIFIED BY SHADING AND MARK ⚠ ON THE SCHEMATIC DIAGRAMS, EXPLODED VIEWS AND IN THE PARTS LIST ARE CRITICAL TO SAFE OPERATION. REPLACE THESE COMPONENTS WITH SONY PARTS WHOSE PART NUMBERS APPEAR AS SHOWN IN THIS MANUAL OR IN SUPPLEMENTS PUBLISHED BY SONY. CIRCUIT ADJUSTMENTS THAT ARE CRITICAL TO SAFE OPERATION ARE IDENTIFIED IN THIS MANUAL. FOLLOW THESE PROCEDURES WHENEVER CRITICAL COMPONENTS ARE REPLACED OR IMPROPER OPERATION IS SUSPECTED.

ATTENTION!!

APRES AVOIR DECONNECTE LE CAP DE L'ANODE, COURT-CIRCUITER L'ANODE DU TUBE CATHODIQUE ET CELUI DE L'ANODE DU CAP AU CHASSIS METALLIQUE DE L'APPAREIL, OU AU COUCHE DE CARBONE PEINTE SUR LE TUBE CATHODIQUE OU AU BILNDAGE DU TUBE CATHODIQUE.

ATTENTION!!

AFIN D'EVITER TOUT RISQUE D'ELECTROCUTION PROVENANT D'UN CHÁSSIS SOUS TENSION, UN TRANSFORMATEUR D'ISOLEMENT DOIT ETRE UTILISÉ LORS DE TOUT DÉPANNAGE.

LE CHÁSSIS DE CE RÉCEPTEUR EST DIRECTEMENT RACCORDÉ À L'ALIMENTATION SECTEUR.

ATTENTION AUX COMPOSANTS RELATIFS À LA SÉCURITÉ!!

LES COMPOSANTS IDENTIFIÈS PAR UNE TRAME ET PAR UNE MARQUE ⚠ SUR LES SCHÉMAS DE PRINCIPE, LES VUES EXPLOSÉES ET LES LISTES DE PIECES SONT D'UNE IMPORTANCE CRITIQUE POUR LA SÉCURITÉ DU FONCTIONNEMENT. NE LES REMPLACER QUE PAR DES COMPOSANTS SONY DONT LE NUMÉRO DE PIÉCE EST INDIQUÉ DANS LE PRÉSENT MANUEL OU DANS DES SUPPLÉMENTS PUBLIÉS PAR SONY. LES RÉGLAGES DE CIRCUIT DONT L'IMPORTANCE EST CRITIQUE POUR LA SÉCURITÉ DU PRÉSENT MANUEL. SUIVRE CES PROCÉDURES LORS DE CHAQUE REMPLACEMENT DE COMPOSANTS CRITIQUES, OU LORSQU'UN MAUVAIS FONCTIONNEMENT EST SUSPECTÉ.

SAFETY CHECK-OUT

(US Model only)

After correcting the original service problem, perform the following safety checks before releasing the set to the customer:

1. Check the area of your repair for unsoldered or poorly-soldered connections. Check the entire board surface for solder splashes and bridges.

2. Check the interboard wiring to ensure that no wires are "pinched" or contact high-wattage resistors.

3. Check that all control knobs, shields, covers, ground straps, and mounting hardware have been replaced. Be absolutely certain that you have replaced all the insulators.

4. Look for unauthorized replacement parts, particularly transistors, that were installed during a previous repair. Point them out to the customer and recommend their replacement.

5. Look for parts which, though functioning, show obvious signs of deterioration. Point them out to the customer and recommend their replacement.

6. Check the line cords for cracks and abrasion. Recommend the replacement of any such line cord to the customer.

7. Check the B+ and HV to see if they are at the values specified. Make sure your instruments are accurate; be suspicious of your HV meter if sets always have low HV.

8. Check the metal trim, metallized knobs, screws, and all other exposed metal parts for AC leakage.
   Check leakage as described below.

LEAKAGE TEST

The AC leakage from any exposed metal part to earth ground and from all exposed metal parts to any exposed metal part having a return to chassis, must not exceed 0.5mA (500 microampers). Leakage current can be measured by any one of three methods.

1. A commercial leakage tester, such as the Simpson 229 or RCA WT-540A. Follow the manufactures' instructions to use these instruments.

2. A battery-operated AC milliammeter. The Data Precision 245 digital multimeter is suitable for this job.

3. Measuring the voltage drop across a resistor by means of a VOM or battery-operated AC voltmeter. The "limit" indication is 0.75V, so analog meters must have an accurate low-voltage scale. The Simpson 250 and Sanwa SH-63Trd are examples of a passive VOM that is suitable. Nearly all battery operated digital multimeters that have a 2V AC range are suitable. (See Fig. A)

HOW TO FIND A GOOD EARTH GROUND

A cold-water pipe is guaranteed earth ground; the cover-plate retaining screw on most AC outlet boxes is also at earth ground. If the retaining screw is to be used as your earth-ground, verify that it is at ground by measuring the resistance between it and a cold-water pipe with an ohmmeter. The reading should be zero ohms. If a cold-water pipe is not accessible, connect a 60-100 watts trouble light (not a neon lamp) between the hot side of the receptacle and the retaining screw. Try both slots, if necessary, to locate the hot side of the line, the lamp should light at normal brilliance if the screw is at ground potential. (See Fig. B)

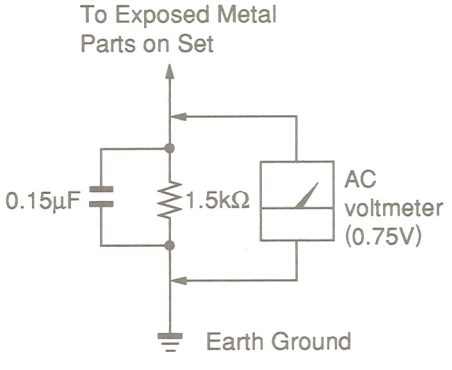

Fig. A. Using an AC voltmeter to check AC leakage.

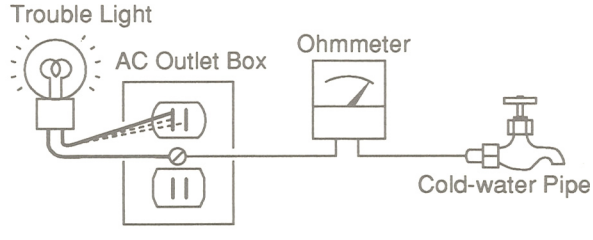

Fig. B. Checking for earth ground.

TABLE OF CONTENTS

Section *Title* *Page*

1. GENERAL

1-1. General of PVM-1953MD
Features 7
Location and Function of Parts and Controls 8
Using On-Screen Menus 12
Power Sources 15
Attaching the Splash Proof Covers 16
1-2. General of PVM-2053MD
Features 17
Location and Function of Parts and Controls 18
Using On-Screen Menus 22
Power Sources 25
Attaching the Splash Proof Covers 26

2. DISASSEMBLY

2-1. Top Cover and Rear Cover Removal 27
2-2. Terminal Board Removal 27
2-3. J, H Boards Removal 27
2-4. Picture Tube Removal 28

3. SET-UP ADJUSTMENTS

3-1. Preparations (1) 29
Preparations (2) 31
3-2. Writing Model Data 31
3-3. Picture Output 31
3-4. Landing Adjustment 31
3-5. Convergence Adjustment 32
3-6. Deflection Yoke Neck Rotation Adjustment 33
3-7. G2 Adjustment 34
3-8. White Balance Adjustment 34
3-9. SUB BRT Adjustment 35
3-10. Focus Adjustment 35

4. SAFETY RELATED ADJUSTMENT

B+ Voltage Confirmation 36
Hold -Down Circuit Voltage Confirmation 36

Section *Title* *Page*

5. CIRCUIT ADJUSTMENTS

5-1. A Board Adjustment 38
I. Preparations 39
II. Deflection System Adjustment
1. Adjusting the Horizontal Oscillation Frequency 39
2. H-BLK Adjustment 40
3. Picture Phase Adjustment 40
4. V-BLK Adjustment 40
5. Vertical Deflection Section Adjustment 40
6. Horizontal Deflection Section Adjustment (Normal Scan Adjustment) 41
7. Horizontal Deflection Section Adjustment (Under Scan Adjustment) 41
8. Over Scan Adjustment 42
9. OSD Position Adjustment 42
10. Writing the Adjustment 42
III. Signal System Adjustment
1. Sub Con Adjustment 43
2. Sub Phase Adjustment 43
3. Sub Chroma Adjustment 43
4. R–Y level Adjustment 43
5. Smpte Sub Color Adjustment 44
6. Burst Gate Pulse Width Adjustment 44
7. VXO Adjustment 44
8. NTSC Color Demodulation Adjustment 44
9. Writing the Adjustment Result 46
5-2. G Board Adjustment 46

6. DIAGRAMS

6-1. Block Diagrams (1) 47
Block Diagrams (2) 52
6-2. Frame Schematic Diagram 57
6-3. Circuit Boards Location 59
6-4. Printed Wiring Boards and Schematic Diagrams 59
• A Board 62
• Q Board 81
• G Board 82
• H Board 83
• S Board (PVM-1953MD ONLY) 84
• J Board 84
• X Board 84
• C Board 88
• M Board 90
6-5. Semiconductors 93

7. EXPLODED VIEWS

7-1. Chassis 95
7-2. Picture Tube 96

8. ELECTRICAL PARTS LIST 97

SECTION 1
GENERAL

1-1. GENERAL OF PVM-1953MD

Features

The operating instructions mentioned here are partial abstracts from the Operating Instruction Manual. The page numbers of the Operating Instruction Manual remain as in the manual.

PVM-1953MD

Picture

HR (High Resolution) Trinitron picture tube
HR Trinitron tube provides a high resolution picture. Horizontal resolution is more than 600 TV lines at the center of the picture.

Comb filter
When NTSC video signals are received, a comb filter activates to increase the resolution, resulting in fine picture detail without color spill or color noise.

Beam current feedback circuit
The built-in beam current feedback circuit assures stable white balance.

Inputs

Two color systems available
The monitor can display PAL, and NTSC signals. The appropriate color system is selected automatically.

Analog RGB/component input connectors
Analog RGB or component (Y, R-Y and B-Y) signals from video equipment can be input through these connectors. Press the RGB/COMPONENT A/B select button on the front panel and select RGB or component signals from the on-screen menu.

Y/C input connector (S input connector)
The video signal, split into the chrominance signal (C) and the luminance signal (Y), can be input through this connector, eliminating the interference between the two signals, which tends to occur in a composite video signal, assuring video quality.

External sync input connectors
When the external RGB or component signal is input and sync signal is set to external in the on-screen menu, the monitor can be operated on the sync signal supplied from an external sync generator.

Automatic termination (only terminals with the -\/\/- mark)
The BNC input connectors on the rear panel are terminated at 75 ohms inside, when no cable is connected to the loop-through output connectors. When a cable is connected to an output connector, the 75-ohm termination is automatically released.

Functions

On-screen menus
You can set color temperature, CHROMA SET UP, and other settings by using the on-screen menus.

Overscan mode
The display size is enlarged by approximately 20% and the center part of the screen is easier to watch.

Underscan mode
The signal normally scanned outside of the screen can be monitored in the underscan mode.

Note
When the monitor is in the underscan mode, the dark RGB scanning lines may appear on the top edge of the screen. These are caused by an internal test signal, rather than the input signal.

Split function
The display splits into two parts (upper and lower). The upper part of the screen monitors the signal fed through the RGB/COMPONENT A input connectors and lower part of the screen monitors the signal fed through the RGB/COMPONENT B input connectors. You can compare the two screens.

Caption vision (Closed Caption) decoder
When a signal with Caption Vision is input, the caption is superimposed on the screen. You can select ON or OFF and set the caption type on the on-screen menu.

Auto/manual degaussing
Degaussing of the screen can be performed automatically when the power is turned on, or manually by pressing the DEGAUSS button.

Five menu languages
You can select the language used for on-screen menus from the five languages.

Splash proof cover(s) and control panel cover
Splash proof covers that protect the ventilation holes from splashes (of medicines, etc.) and a control panel cover that protects the control buttons on the front panel from undesired touching are supplied.

Quick Reference Card
The Quick Reference Card is supplied to help you understand the menu configuration and operating method. You can attach the supplied double-sided adhesive tapes on the rear of the card.

EIA standard 19-inch rack mounting
By using an MB-502B (for PVM-1353MD) or SLR-103 (for PVM-1953MD) Mounting Bracket (not supplied), the monitor can be mounted in an EIA standard 19-inch rack. For details on mounting, see the instruction manual of the mounting bracket kit.

3

Location and Function of Parts and Controls

PVM-1953MD

Front Panel

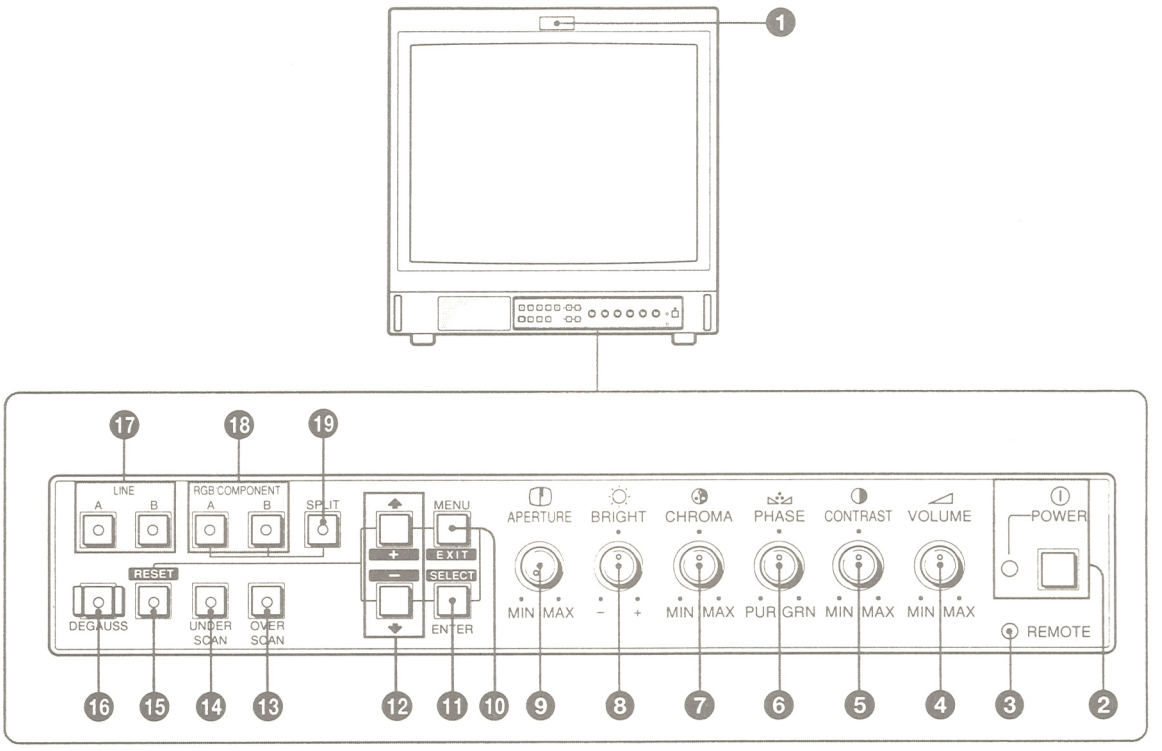

❶ Tally indicator
This indicator lights up when the video camera connected to this monitor is selected, indicating that the picture is being recorded. The tally control connection is needed.
For the pin assignment, see "Specifications" on page 14.

❷ ⏻ POWER switch and indicator
Depress to turn the monitor on. The indicator will light up in green. To turn the power off, press this again.

❸ REMOTE indicator
This indicator lights up in the conditions below:
— When PRESET is set to ON in the menu.
— When REMOTE (RS-232C) is set to REMOTE ONLY or REMOTE & LOCAL in the menu, or
— When REMOTE ON is set via the REMOTE 1 terminal.

❹ VOLUME control
Turn this control clockwise or counterclockwise to obtain the desired volume.

❺ CONTRAST control
Turn clockwise to make the contrast stronger and counterclockwise to make it weaker.

❻ PHASE control
This control is effective only for the NTSC color system. Turn clockwise to make the skin tones greenish and counterclockwise to make them purplish.

❼ CHROMA (chrominance) control
Turn clockwise to make the color intensity stronger and counterclockwise to make it weaker.

❽ BRIGHT (brightness) control
Turn clockwise for more brightness and counterclockwise for less.

❾ APERTURE control
Turn clockwise for more sharpness and counterclockwise for less.
When the control is set to MIN, the picture becomes flat without need for corrections.

Note

The APERTURE, CHROMA, PHASE control settings have no effect on the pictures of RGB signals.

❿ MENU (EXIT) button
Press to make the menu appear.
Press to return to the previous screen in the menu.

⓫ ENTER (SELECT) button
Press to decide a selected item in the menu.

⓬ ↑ (+)/ ↓ (–) buttons
Press to move the cursor (▶) or adjust selected value in the menus.

⑬ OVERSCAN button
Press (light on) for overscanning. The display size is extended by approximately 20% so that the center of screen is easier to watch. By pressing the button again, the display returns to the normal size (light off).

⑭ UNDERSCAN button
Press (light on) for underscanning. The display size is reduced by approximately 5% so that four corners of the raster are visible. By pressing the button again, the display returns to the normal size (light off).

⑮ RESET button
During menu adjustments, press to reset the setting in the menu.

⑯ DEGAUSS button
Press this button momentarily. The screen will be demagnetized.
Wait for 10 minutes or more before activating this button again.

Note

The picture rolls vertically while the screen is being demagnetized.

⑰ LINE A/B select buttons
Press to select a signal (light on).
A: Press to monitor the signal fed through the LINE A input connectors.
B: Press to monitor the signal fed through the LINE B input connectors.

⑱ RGB/COMPONENT A/B select buttons
Press to select a signal (light on).
A: Press to monitor the signal fed through the RGB/COMPONENT A input connectors.
B: Press to monitor the signal fed through the RGB/COMPONENT B input connectors.

⑲ SPLIT button
When you select RGB signals fed through the RGB/COMPONENT A and RGB/COMPONENT B input connectors, press this button (light on) to split the display into two parts (upper and lower), and monitor the both RGB signals simultaneously.

Note

Make sure the signals fed through the RGB/COMPONENT A and RGB/COMPONENT B input connectors are synchronized.

Location and Function of Parts and Controls

PVM-1953MD

Rear Panel

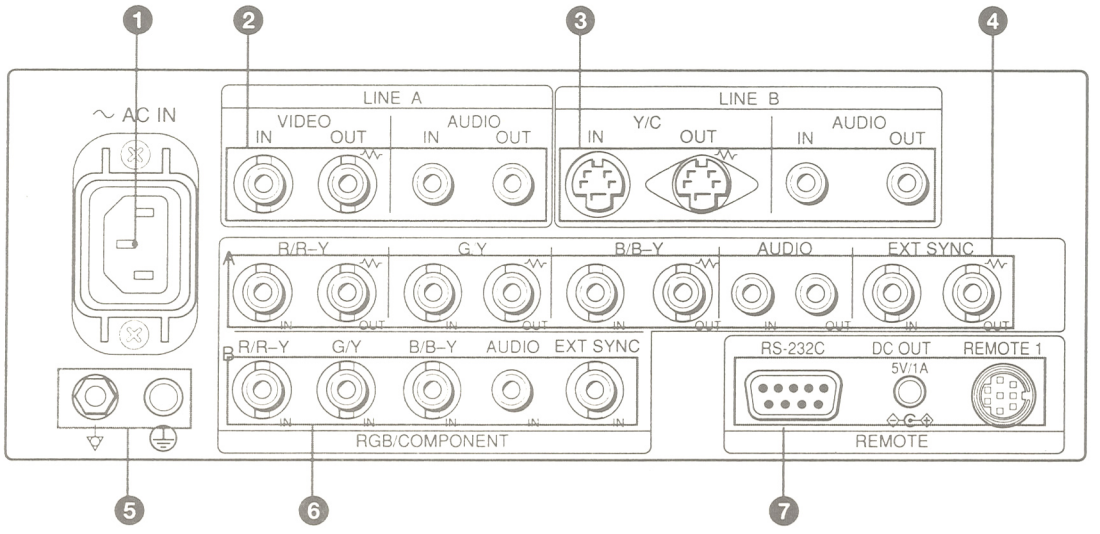

(The ⌇⌇ mark indicates automatic termination.)

❶ AC IN socket
Connect the supplied AC power cord to this socket.

❷ LINE A connectors
Line input connectors for the composite video and audio signals and their loop-through output connectors.
To monitor the input signal fed through these connectors, press LINE A select button (light on) on the front panel.

VIDEO IN (BNC)
Connect to the video output connector of a video equipment, such as a VTR or a color video camera. For a loop-through connection, connect to the video output connector of another monitor.
VIDEO OUT (BNC)
Loop-through output of the VIDEO IN connector. Connect to the video input connector for a VTR or another monitor.
When the cable is connected to this connector, the 75-ohms termination of the input is automatically released, and the signal input to the VIDEO IN connector is output from this connector.
AUDIO IN (phono jack)
Connect to the audio output connector of a VTR or to a microphone through a suitable microphone amplifier. For a loop-through connection, connect to the audio output connector of another monitor.
AUDIO OUT (phono jack)
Loop-through output of the AUDIO IN connector. Connect to the audio input connector of a VTR or another monitor.

❸ LINE B connectors
Separated Y/C input connectors, audio input connectors, and corresponding loop-through output connectors.
To monitor the input signal fed through these connectors, press LINE B select button (light on) on the front panel.

Y/C IN (4-pin mini DIN)
Connect to the Y/C separate output connector of a VTR, video camera or other video equipment.
Y/C OUT (4-pin mini DIN)
Loop-through output of the Y/C IN connector. Connect to the Y/C separate input connector of a VTR or another monitor.
When the cable is connected to this connector, the 75-ohms termination of the input is automatically released, and the signal input to the Y/C IN connector is output from this connector.
AUDIO IN (phono jack)
Connect to the audio output connector of a VTR or to a microphone through a suitable microphone amplifier. For a loop-through connection, connect to the audio output connector of another monitor.
AUDIO OUT (phono jack)
Loop-through output of the AUDIO IN connector. Connect to the audio input connector of a VTR or another monitor.

❹ RGB/COMPONENT A connectors
RGB signal or component signal input connectors and their loop-through output connectors.
To monitor the input signal fed through these connectors, press the RGB/COMPONENT A select button (light on) on the front panel.
Then select one out of four items in the RGB A SYSTEM menu to set the RGB or COMP (component) signal and the INT SYNC (internal sync) or EXT SYNC (external sync) signal.
For the operation through the menus, see pages 8 to 10.

R/R-Y IN, G/Y IN, B/B-Y IN (BNC)
When "RGB-INT SYNC" or "COMP-INT SYNC" is selected in the RGB A SYSTEM menu, the monitor operates on the sync signal from the G/Y channel.
To monitor the RGB signal
Connect to the analog RGB signal output connectors of a video camera.
To monitor the component signal
Connect to the R-Y/Y/B-Y component signal output connectors of a Sony Betacam SP™ camcorder.

R/R-Y OUT, G/Y OUT, B/B-Y OUT (BNC)
Loop-through outputs of the R/R-Y IN, G/Y IN, B/B-Y IN connectors.
When the cables are connected to these connectors, the 75-ohms termination of the inputs is automatically released, and the signal inputs to the R/R-Y IN, G/Y IN, B/B-Y IN connectors are output from these connectors.
To output the analog RGB signal
Connect to the analog RGB signal input connectors of a video printer or another monitor.
To output the component signal
Connect to the R-Y/Y/B-Y component signal input connectors of a Sony Betacam SP VTR.

AUDIO IN (phono jack)
Connect to the audio output connector of video equipment when the analog RGB or component signal is input.
AUDIO OUT (phono jack)
Loop-through outputs of the AUDIO IN connector.

EXT SYNC (external sync) IN (BNC)
When this monitor operates on an external sync signal, connect the signal from a sync generator to this connector.
To use the sync signal fed through this connector, select "RGB-EXT SYNC" or "COMP-EXT SYNC" in the RGB A SYSTEM menu.
EXT SYNC (external sync) OUT (BNC)
Loop-through output of the EXT SYNC IN connector. Connect to the external sync input connector of video equipment to be synchronized with this monitor.
When the cable is connected to this connector, the 75-ohms termination of the input is released, and the signal input to the EXT SYNC IN connector is output from this connector.

❺ Ground (⏚/⏚) terminal
Connect a GND cable.

❻ RGB/COMPONENT B connectors
RGB signal or component signal input connectors.
To monitor the input signal fed through these connectors, press the RGB/COMPONENT B select button (light on) on the front panel.
Then select one out of four items in the RGB B SYSTEM menu to set the RGB or COMP (component) signal and the INT SYNC (internal sync) or EXT SYNC (external sync) signal.
For the operation through the menus, see pages 8 to 10.

R/R-Y IN, G/Y IN, B/B-Y IN (BNC)
When "RGB-INT SYNC" or "COMP-INT SYNC" is selected in the RGB B SYSTEM menu, the monitor operates on the sync signal from the G/Y channel.
To monitor the RGB signal
Connect to the analog RGB signal output connectors of a video camera.
To monitor the component signal
Connect to the R-Y/Y/B-Y component signal output connectors of a Sony Betacam SP camcorder.

AUDIO IN (phono jack)
Connect to the audio output connector of video equipment when the analog RGB or component signal is input.

EXT SYNC (external sync) IN (BNC)
When this monitor operates on an external sync signal, connect the signal from a sync generator to this connector.
To use the sync signal fed through this connector, select "RGB -EXT SYNC" or "COMP-EXT SYNC" in the RGB B SYSTEM menu.

❼ REMOTE connectors
RS-232C (D-sub 9-pin)
Connect to the RS-232C control connector of other equipment. You can operate the monitor with the control command from the equipment.
For the details, see the supplied Interface Manual for Programmers.

REMOTE 1 (8-pin mini DIN)
Connect to the tally output connector of a control console, effects, etc. The tally indicator on the front panel will be turned on and off by the connected equipment.
You can also connect a remote controller using this connector.

For the pin assignments of these connectors, see "Specifications" on page 2.

DC OUT 5V/1A connector
You can use this connector as a power source for the other equipment.
DC 5V/1A is output.

Using On-Screen Menus

PVM-1953MD

Menu Configuration

The flow chart shows the different levels of on-screen menus that you can use to make various adjustments and settings.
For details of each menu, see pages 9 and 10.

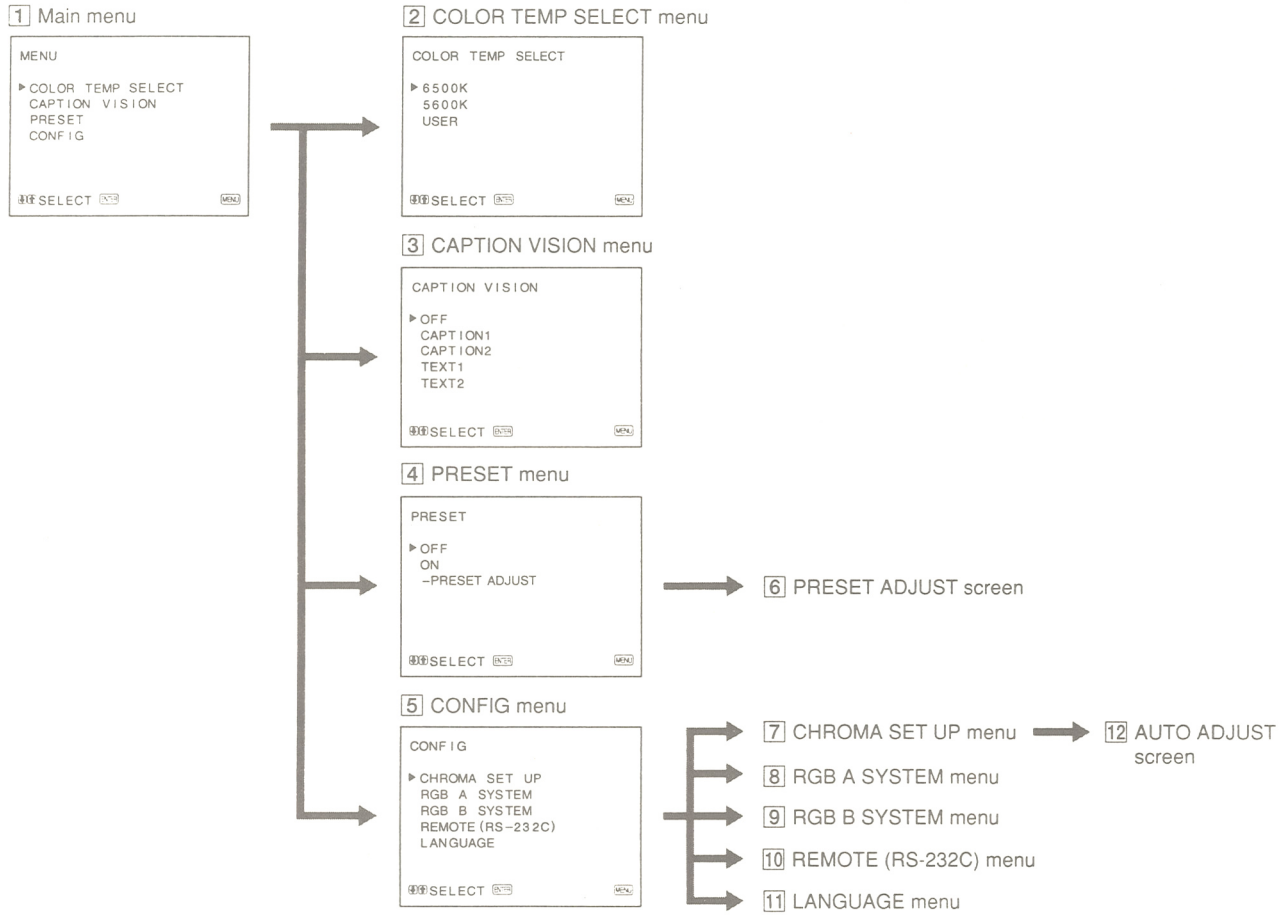

User Service Mode

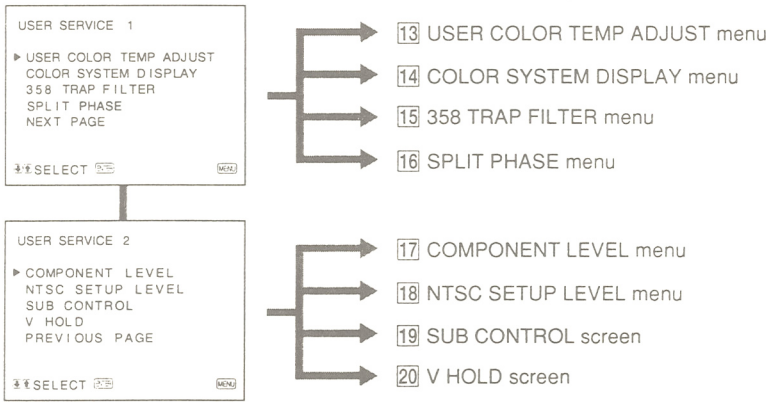

Operating through Menus

There are five buttons for menu operations on the front panel of the monitor. To display the main menu, first press MENU (EXIT). The buttons you can use appear at the bottom of the menu screen.

Functions of the buttons

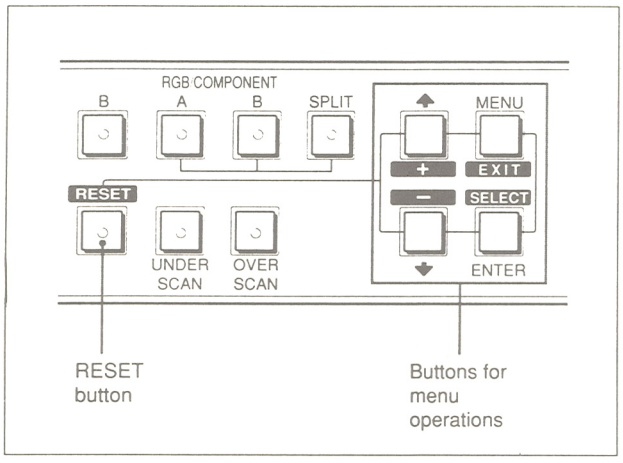

Button	To select menu item	To adjust selected menu item
MENU / EXIT	return to the previous menu.	return to the previous menu.
ENTER / SELECT	decide a selected item.	select an item.
↑ / +	move the cursor (▶) upwards.	increase selected value.
− / ↓	move the cursor (▶) downwards.	decrease selected value.
RESET		reset current adjustment value to the factory setting.

(The above items in white type correspond to the marks in the menu.)

The Contents of Menu Items

The following sentences show the details of each menu items.
[ ] indicates the factory setting position.

1 Main menu
Select an item and press the ENTER (SELECT) button to go to the following menu.

2 COLOR TEMP SELECT menu
Select the color temperature from among 6500K, 5600K and USER. USER is set to 6500K in the factory setting. You can adjust or change the color temperature in USER mode (a measuring instrument is needed).
[6500K]

Note

The color temperature of the USER mode can be adjusted in the range from 3200K to 10000K.
You can adjust the color temperature of the USER mode in the USER COLOR TEMP ADJUST menu (13) of the user service mode.
For the details, see "USER COLOR TEMP ADJUST menu (13)" on page 10.

3 CAPTION VISION menu
To display closed captions, select ON and the type of caption you would like.
[OFF]

4 PRESET menu
You can preset each control to a desired level and set it. If you set PRESET to ON, the REMOTE indicator lights up and the controls on the front panel do not work. The monitor operates with the internal memory settings. For adjustment, select the PRESET ADJUST screen.
[OFF]

5 CONFIG menu
Select an item for adjustment of the monitor.

6 PRESET ADJUST screen
Adjust CONTRAST, BRIGHT, CHROMA, PHASE, VOLUME, APERTURE in the PRESET menu.

7 CHROMA SET UP menu
Set to ON to adjust the internal decoder for CHROMA and PHASE (NTSC signal only) after AUTO ADJUST screen (12).
[OFF]

8 RGB A SYSTEM menu
To monitor the signal fed through the RGB/COMPONENT A connectors, set the RGB or COMP (component) signal and the INT SYNC (internal sync) or EXT SYNC (external sync) signal in this menu.
[RGB-INT SYNC]

9 RGB B SYSTEM menu

To monitor the signal fed through the RGB/COMPONENT B connectors, set the RGB or COMP (component) signal and the INT SYNC (internal sync) or EXT SYNC (external sync) signal in this menu.

[RGB-INT SYNC]

10 REMOTE (RS-232C) menu

Select one out of following three modes.

REMOTE OFF:

You can adjust settings and controls by the buttons and controls on the front panel.

RS-232C connector does not function.

REMOTE ONLY:

You can adjust settings and controls through the RS-232C connector.

Buttons and controls on the front panel, except the menu operation ones, do not function.

REMOTE & LOCAL:

You can adjust settings and controls both through the RS-232C connector and the front panel buttons.

Controls on the front panel do not function.

[REMOTE OFF]

11 LANGUAGE menu

You can select the language used for on-screen menus from the following five languages (English, German, French, Italian, Spanish).

[ENGLISH]

12 AUTO ADJUST screen

Select the color bar signal (full, SMPTE, EIA) and press the ENTER (SELECT) button to start automatic adjustment for CHROMA and PHASE. For these adjustments to be valid, you must select ON in CHROMA SET UP menu (7).

User Service Mode

The user service mode is useful when adjusting the settings and controls except for the above.

To enter the user service mode, press and hold the MENU (EXIT) button until the following USER SERVICE 1 appears.

To move to the second page of the mode, select "NEXT PAGE" and to return to the first page of the menu, select "PREVIOUS PAGE".

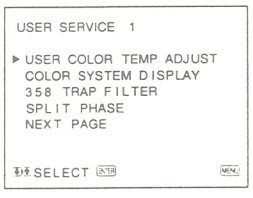

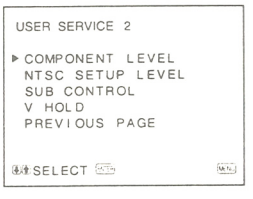

13 USER COLOR TEMP ADJUST menu

The value of adjustment in this menu works only when "USER" is selected in the COLOR TEMP SELECT menu (2).

ADJUST GAIN:

Adjusts the color balance (gain) of the USER mode.

ADJUST BIAS:

Adjusts the color balance (bias) of the USER mode.

COLOR TEMP RANGE:

When you adjust the color temperature in the USER mode, select a color temperature range before adjusting ADJUST GAIN and ADJUST BIAS. If the adjusted color temperature is between 3200K and 5000K, select "3200K-5000K." If the adjusted color temperature is between 5000K and 10000K, select "5000K-10000K." [5000K-10000K]

14 COLOR SYSTEM DISPLAY menu

Select the color system display mode. In AUTO, the kind of color system being used appears on the screen each time you change the signal input. [AUTO]

15 358 TRAP FILTER menu

Color spill or color noise may be eliminated if you select ON (NTSC signal only). Normally set it to OFF.

[OFF]

16 SPLIT PHASE menu

When the SPLIT function is activated, if the lower side picture (the signal fed through the RGB/COMPONENT B input connectors) has some discrepancy of location with the upper side picture, adjust the SPLIT PHASE menu.

Each time you press the ↑(+) button, the lower side picture moves left.

Note

When the adjustment is made in the menu, the skew error will occur on the top of the lower side picture.

17 COMPONENT LEVEL menu

Select the component level from among three modes.

N10/SMPTE: for 100/0/100/0 signal

BETA 7.5: for 100/7.5/75/7.5 signal

BETA 0: for 100/0/75/0 signal [BETA 7.5]

18 NTSC SETUP LEVEL menu

Select the NTSC setup level from two modes. The 7.5 setup level is mainly used in north America. The 0 setup level is mainly used in Japan. [7.5]

19 SUB CONTROL screen

You can finely adjust the controls on the front panel. CONTRAST, PHASE, CHROMA and BRIGHT controls have clicks at the center of their adjustment range. You can adjust the setting of the click position with this feature.

20 V HOLD screen

Adjust the vertical hold if the picture rolls vertically.

Note

If the rolling of the picture prevents you from watching the screen, select an input that has nothing connected.

Power Sources

PVM-1953MD

House Current

Connect the supplied AC power cord to the AC IN socket on the rear panel and to a wall outlet.

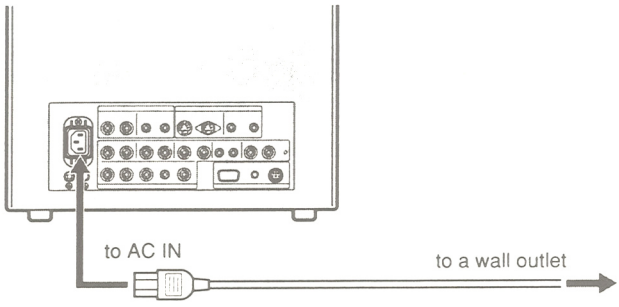

To connect an AC power cord securely with the AC plug holder

1

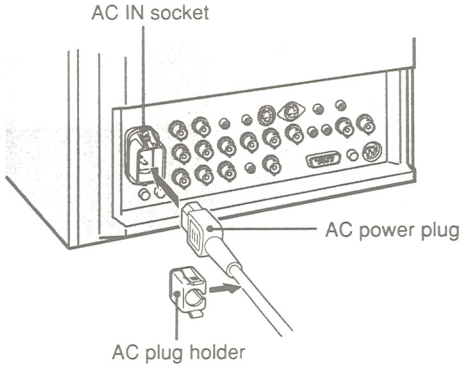

Plug the power cord into the AC IN socket. Then, attach the AC plug holder (supplied) on top of the AC power cord.

2

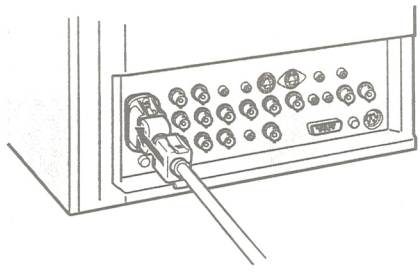

Slide the AC plug holder over the cord until it connects with the attached holder.

To remove the AC power cord

Pull out AC plug holder by squeezing the up and down sides.

Attaching the Splash Proof Covers

PVM-1953MD

In order to protect the ventilation holes from splashes (of medicines, etc.), attach the splash proof covers (supplied) as shown below.

1

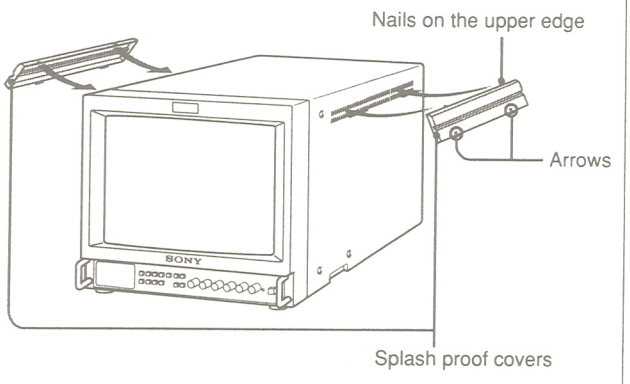

Making sure the arrows on the cover are facing down, hook the nails on the upper edge into the ventilation holes.

Note

Attach the splash proof covers to all them ventilation holes.

2

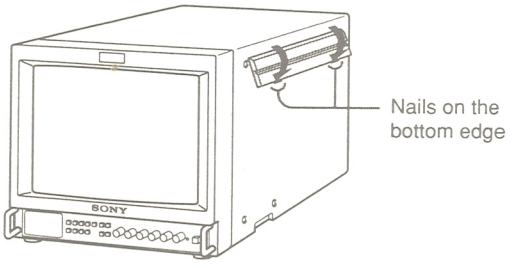

Push up the nails on the bottom edge and fit the cover into the lowest ventilation holes.
Attach the both covers to the left and right sides.

Attaching the Control Panel Cover

In order to protect the control buttons on the front panel from undesired touching, attach the supplied control panel cover.

1

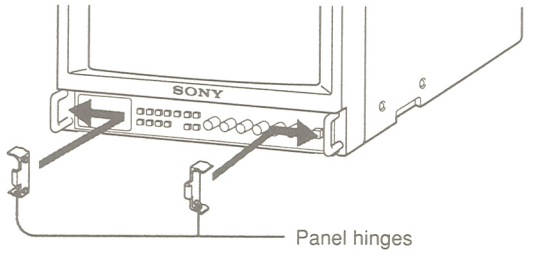

Attach the panel hinges to the left and right grips from the inner side.

2

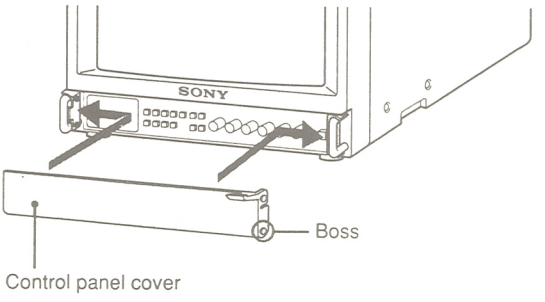

Fit the bosses on the both sides of the control panel cover into the lower holes of the panel hinges with bending the control panel cover a little.

Features

PVM-2053MD

Picture

HR (High Resolution) Trinitron picture tube
HR Trinitron tube provides a high resolution picture. Horizontal resolution is more than 600 TV lines at the center of the picture.

Comb filter
When NTSC video signals are received, a comb filter activates to increase the resolution, resulting in fine picture detail without color spill or color noise.

Beam current feedback circuit
The built-in beam current feedback circuit assures stable white balance.

Inputs

Two color systems available
The monitor can display PAL, and NTSC signals. The appropriate color system is selected automatically.

Analog RGB/component input connectors
Analog RGB or component (Y, R-Y and B-Y) signals from video equipment can be input through these connectors. Press the RGB/COMPONENT A/B select button on the front panel and select RGB or component signals from the on-screen menu.

Y/C input connector (S input connector)
The video signal, split into the chrominance signal (C) and the luminance signal (Y), can be input through this connector, eliminating the interference between the two signals, which tends to occur in a composite video signal, assuring video quality.

External sync input connectors
When the external RGB or component signal is input and sync signal is set to external in the on-screen menu, the monitor can be operated on the sync signal supplied from an external sync generator.

Automatic termination (only terminals with the -⋀⋁- mark)
The BNC input connectors on the rear panel are terminated at 75 ohms inside, when no cable is connected to the loop-through output connectors. When a cable is connected to an output connector, the 75-ohm termination is automatically released.

Functions

On-screen menus
You can set color temperature, CHROMA SET UP, and other settings by using the on-screen menus.

Overscan mode
The display size is enlarged by approximately 20% and the center part of the screen is easier to watch.

Underscan mode
The signal normally scanned outside of the screen can be monitored in the underscan mode.

Note

When the monitor is in the underscan mode, the dark RGB scanning lines may appear on the top edge of the screen. These are caused by an internal test signal, rather than the input signal.

Split function
The display splits into two parts (upper and lower). The upper part of the screen monitors the signal fed through the RGB/COMPONENT A input connectors and lower part of the screen monitors the signal fed through the RGB/COMPONENT B input connectors. You can compare the two screens.

Auto/manual degaussing
Degaussing of the screen can be performed automatically when the power is turned on, or manually by pressing the DEGAUSS button.

Five menu languages
You can select the language used for on-screen menus from the five languages.

Splash proof cover(s) and control panel cover
Splash proof covers that protect the ventilation holes from splashes (of medicines, etc.) and a control panel cover that protects the control buttons on the front panel from undesired touching are supplied.

Quick Reference Card
The Quick Reference Card is supplied to help you understand the menu configuration and operating method. You can attach the supplied double-sided adhesive tapes on the rear of the card.

EIA standard 19-inch rack mounting
By using an MB-502B (for PVM-1453MD) or SLR-103 (for PVM-2053MD) Mounting Bracket (not supplied), the monitor can be mounted in an EIA standard 19-inch rack. For details on mounting, see the instruction manual of the mounting bracket kit.

Location and Function of Parts and Controls

PVM-2053MD

Front Panel

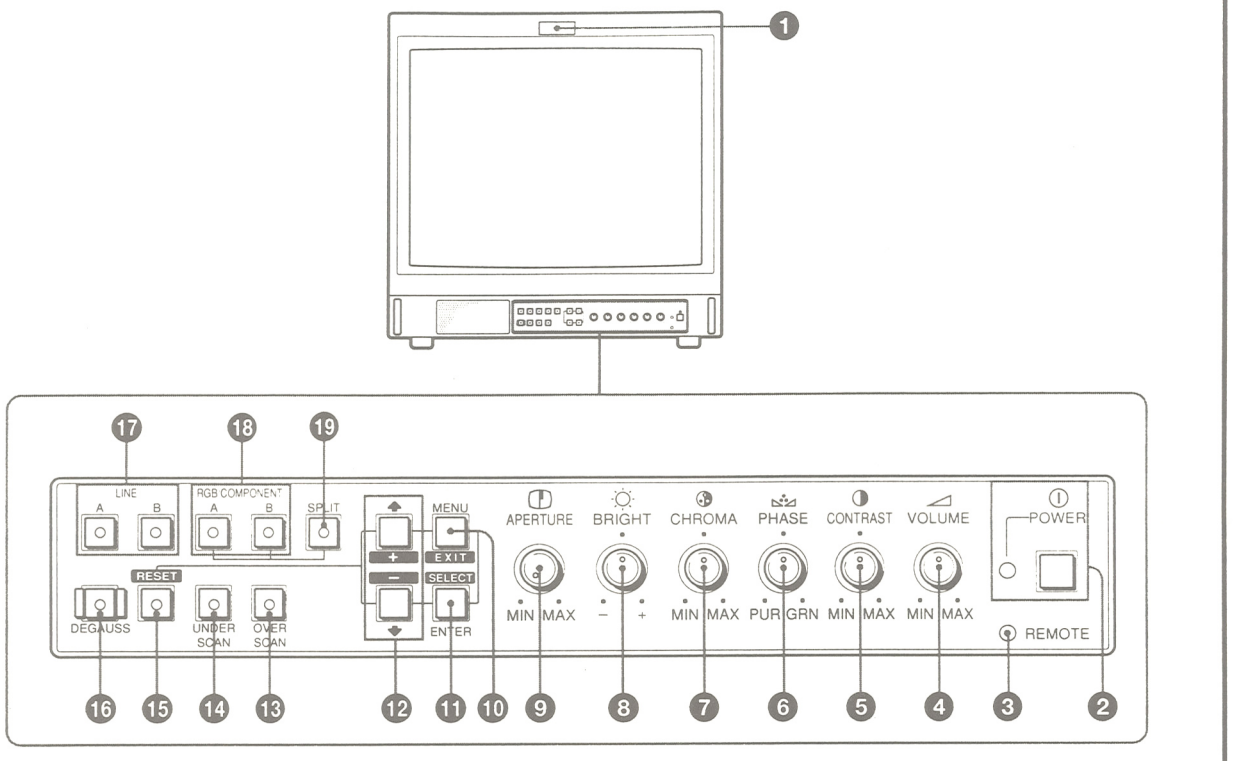

1 Tally indicator
This indicator lights up when the video camera connected to this monitor is selected, indicating that the picture is being recorded. The tally control connection is needed.
For the pin assignment, see "Specifications" on page 16.

2 ⏻ POWER switch and indicator
Depress to turn the monitor on. The indicator will light up in green. To turn the power off, press this again.

3 REMOTE indicator
This indicator lights up in the conditions below:
— When PRESET is set to ON in the menu.
— When REMOTE (RS-232C) is set to REMOTE ONLY or REMOTE & LOCAL in the menu, or
— When REMOTE ON is set via the REMOTE 1 terminal.

4 ◿ VOLUME control
Turn this control clockwise or counterclockwise to obtain the desired volume.

5 ◑ CONTRAST control
Turn clockwise to make the contrast stronger and counterclockwise to make it weaker.

6 PHASE control
This control is effective only for the NTSC color system. Turn clockwise to make the skin tones greenish and counterclockwise to make them purplish.

7 CHROMA (chrominance) control
Turn clockwise to make the color intensity stronger and counterclockwise to make it weaker.

8 ☼ BRIGHT (brightness) control
Turn clockwise for more brightness and counterclockwise for less.

9 APERTURE control
Turn clockwise for more sharpness and counterclockwise for less.
When the control is set to MIN, the picture becomes flat without need for corrections.

Note

The APERTURE, CHROMA, PHASE control settings have no effect on the pictures of RGB signals.

10 MENU (EXIT) button
Press to make the menu appear.
Press to return to the previous screen in the menu.

11 ENTER (SELECT) button
Press to decide a selected item in the menu.

12 ↑ (+)/ ↓ (–) buttons
Press to move the cursor (▶) or adjust selected value in the menus.

⑬ **OVERSCAN button**
Press (light on) for overscanning. The display size is extended by approximately 20% so that the center of screen is easier to watch. By pressing the button again, the display returns to the normal size (light off).

⑭ **UNDERSCAN button**
Press (light on) for underscanning. The display size is reduced by approximately 5% so that four corners of the raster are visible. By pressing the button again, the display returns to the normal size (light off).

⑮ **RESET button**
During menu adjustments, press to reset the setting in the menu.

⑯ **DEGAUSS button**
Press this button momentarily. The screen will be demagnetized.
Wait for 10 minutes or more before activating this button again.

Note

The picture rolls vertically while the screen is being demagnetized.

⑰ **LINE A/B select buttons**
Press to select a signal (light on).
A: Press to monitor the signal fed through the LINE A input connectors.
B: Press to monitor the signal fed through the LINE B input connectors.

⑱ **RGB/COMPONENT A/B select buttons**
Press to select a signal (light on).
A: Press to monitor the signal fed through the RGB/COMPONENT A input connectors.
B: Press to monitor the signal fed through the RGB/COMPONENT B input connectors.

⑲ **SPLIT button**
When you select RGB signals fed through the RGB/COMPONENT A and RGB/COMPONENT B input connectors, press this button (light on) to split the display into two parts (upper and lower), and monitor the both RGB signals simultaneously.

Note

Make sure the signals fed through the RGB/COMPONENT A and RGB/COMPONENT B input connectors are synchronized.

Location and Function of Parts and Controls

PVM-2053MD

Rear Panel

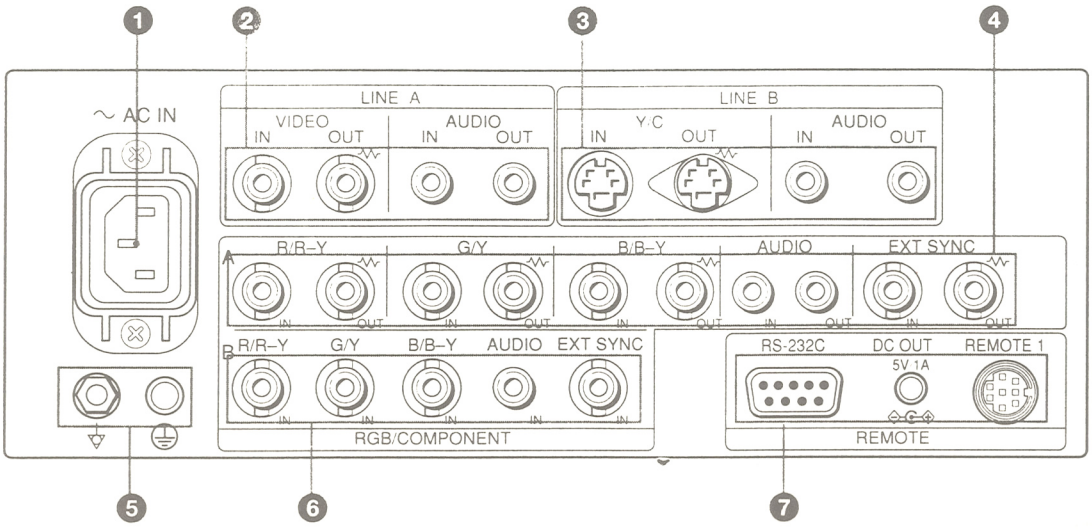

Note

Before connecting the video equipment, see "**Important safeguards/notices for use in the medical environments**" on page 3.

(The ⌇ mark indicates automatic termination.)

❶ **AC IN socket**
Connect the supplied AC power cord to this socket.

❷ **LINE A connectors**
Line input connectors for the composite video and audio signals and their loop-through output connectors.
To monitor the input signal fed through these connectors, press LINE A select button (light on) on the front panel.

VIDEO IN (BNC)
Connect to the video output connector of a video equipment, such as a VTR or a color video camera. For a loop-through connection, connect to the video output connector of another monitor.
VIDEO OUT (BNC)
Loop-through output of the VIDEO IN connector. Connect to the video input connector for a VTR or another monitor.
When the cable is connected to this connector, the 75-ohms termination of the input is automatically released, and the signal input to the VIDEO IN connector is output from this connector.
AUDIO IN (phono jack)
Connect to the audio output connector of a VTR or to a microphone through a suitable microphone amplifier. For a loop-through connection, connect to the audio output connector of another monitor.
AUDIO OUT (phono jack)
Loop-through output of the AUDIO IN connector. Connect to the audio input connector of a VTR or another monitor.

❸ **LINE B connectors**
Separated Y/C input connectors, audio input connectors, and corresponding loop-through output connectors.
To monitor the input signal fed through these connectors, press LINE B select button (light on) on the front panel.

Y/C IN (4-pin mini DIN)
Connect to the Y/C separate output connector of a VTR, video camera or other video equipment.
Y/C OUT (4-pin mini DIN)
Loop-through output of the Y/C IN connector. Connect to the Y/C separate input connector of a VTR or another monitor.
When the cable is connected to this connector, the 75-ohms termination of the input is automatically released, and the signal input to the Y/C IN connector is output from this connector.
AUDIO IN (phono jack)
Connect to the audio output connector of a VTR or to a microphone through a suitable microphone amplifier. For a loop-through connection, connect to the audio output connector of another monitor.
AUDIO OUT (phono jack)
Loop-through output of the AUDIO IN connector. Connect to the audio input connector of a VTR or another monitor.

❹ RGB/COMPONENT A connectors
RGB signal or component signal input connectors and their loop-through output connectors.
To monitor the input signal fed through these connectors, press the RGB/COMPONENT A select button (light on) on the front panel.
Then select one out of four items in the RGB A SYSTEM menu to set the RGB or COMP (component) signal and the INT SYNC (internal sync) or EXT SYNC (external sync) signal.
For the operation through the menus, see pages 10 to 12.

R/R-Y IN, G/Y IN, B/B-Y IN (BNC)
When "RGB-INT SYNC" or "COMP-INT SYNC" is selected in the RGB A SYSTEM menu, the monitor operates on the sync signal from the G/Y channel.
To monitor the RGB signal
Connect to the analog RGB signal output connectors of a video camera.
To monitor the component signal
Connect to the R-Y/Y/B-Y component signal output connectors of a Sony Betacam SP™ camcorder.

R/R-Y OUT, G/Y OUT, B/B-Y OUT (BNC)
Loop-through outputs of the R/R-Y IN, G/Y IN, B/B-Y IN connectors.
When the cables are connected to these connectors, the 75-ohms termination of the inputs is automatically released, and the signal inputs to the R/R-Y IN, G/Y IN, B/B-Y IN connectors are output from these connectors.
To output the analog RGB signal
Connect to the analog RGB signal input connectors of a video printer or another monitor.
To output the component signal
Connect to the R-Y/Y/B-Y component signal input connectors of a Sony Betacam SP VTR.

AUDIO IN (phono jack)
Connect to the audio output connector of video equipment when the analog RGB or component signal is input.
AUDIO OUT (phono jack)
Loop-through outputs of the AUDIO IN connector.

EXT SYNC (external sync) IN (BNC)
When this monitor operates on an external sync signal, connect the signal from a sync generator to this connector.
To use the sync signal fed through this connector, select "RGB-EXT SYNC" or "COMP-EXT SYNC" in the RGB A SYSTEM menu.
EXT SYNC (external sync) OUT (BNC)
Loop-through output of the EXT SYNC IN connector. Connect to the external sync input connector of video equipment to be synchronized with this monitor.
When the cable is connected to this connector, the 75-ohms termination of the input is released, and the signal input to the EXT SYNC IN connector is output from this connector.

❺ Ground (⏚/⏚) terminal
Connect a GND cable.

❻ RGB/COMPONENT B connectors
RGB signal or component signal input connectors.
To monitor the input signal fed through these connectors, press the RGB/COMPONENT B select button (light on) on the front panel.
Then select one out of four items in the RGB B SYSTEM menu to set the RGB or COMP (component) signal and the INT SYNC (internal sync) or EXT SYNC (external sync) signal.
For the operation through the menus, see pages 10 to 12.

R/R-Y IN, G/Y IN, B/B-Y IN (BNC)
When "RGB-INT SYNC" or "COMP-INT SYNC" is selected in the RGB B SYSTEM menu, the monitor operates on the sync signal from the G/Y channel.
To monitor the RGB signal
Connect to the analog RGB signal output connectors of a video camera.
To monitor the component signal
Connect to the R-Y/Y/B-Y component signal output connectors of a Sony Betacam SP camcorder.

AUDIO IN (phono jack)
Connect to the audio output connector of video equipment when the analog RGB or component signal is input.

EXT SYNC (external sync) IN (BNC)
When this monitor operates on an external sync signal, connect the signal from a sync generator to this connector.
To use the sync signal fed through this connector, select "RGB -EXT SYNC" or "COMP-EXT SYNC" in the RGB B SYSTEM menu.

❼ REMOTE connectors
RS-232C (D-sub 9-pin)
Connect to the RS-232C control connector of other equipment. You can operate the monitor with the control command from the equipment.
For the details, see the supplied Interface Manual for Programmers.

REMOTE 1 (8-pin mini DIN)
Connect to the tally output connector of a control console, effects, etc. The tally indicator on the front panel will be turned on and off by the connected equipment.
You can also connect a remote controller using this connector.

For the pin assignments of these connectors, see "Specifications" on page 4.

DC OUT 5V/1A connector
You can use this connector as a power source for the other equipment.
DC 5V/1A is output.

Using On-Screen Menus

PVM-2053MD

Menu Configuration

The flow chart shows the different levels of on-screen menus that you can use to make various adjustments and settings.
For details of each menu, see pages 11 and 12.

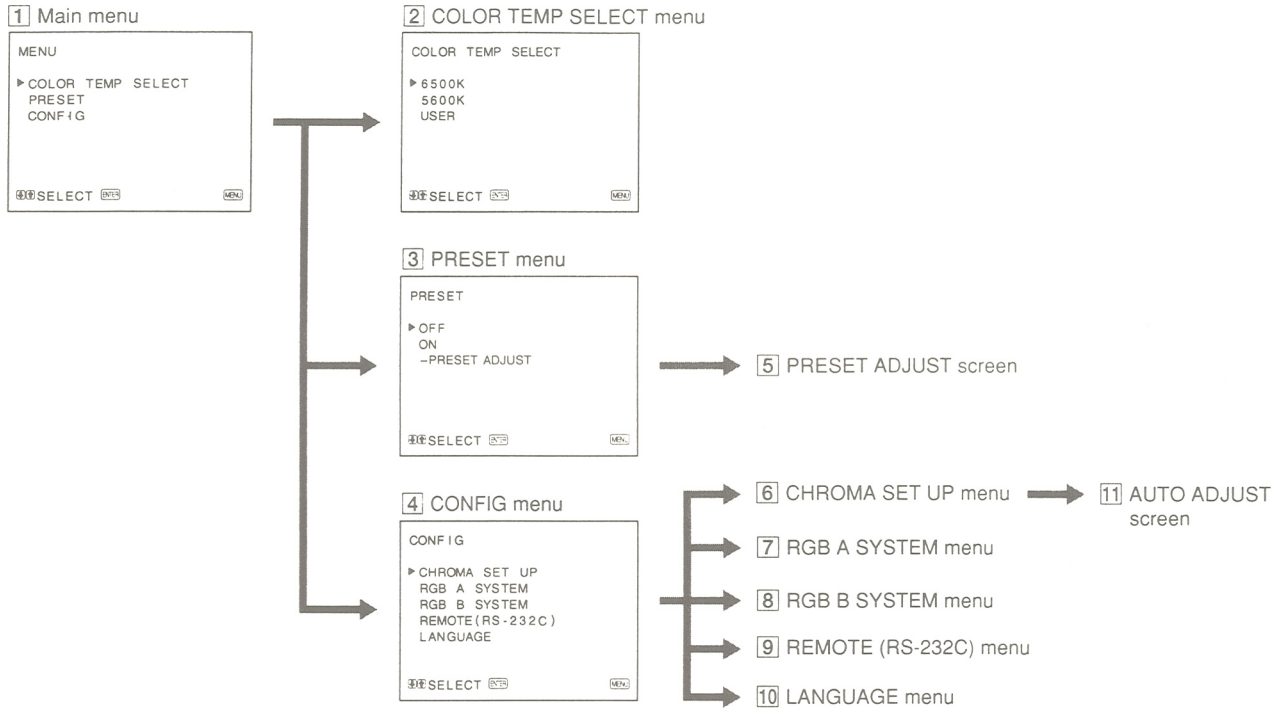

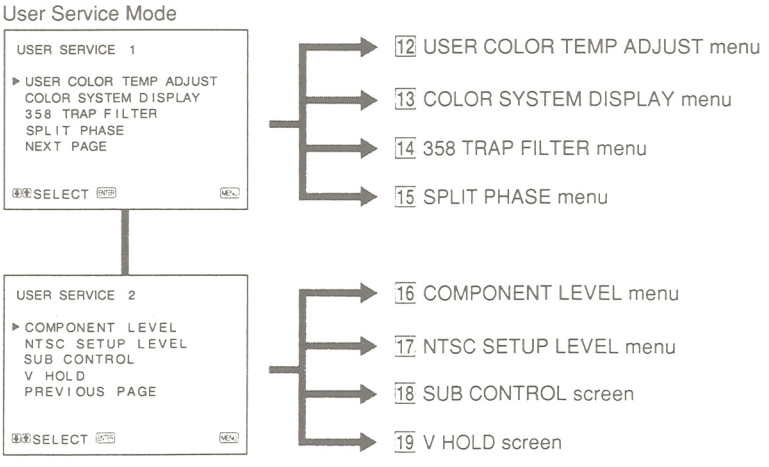

Operating through Menus

There are five buttons for menu operations on the front panel of the monitor. To display the main menu, first press MENU (EXIT). The buttons you can use appear at the bottom of the menu screen.

Functions of the buttons

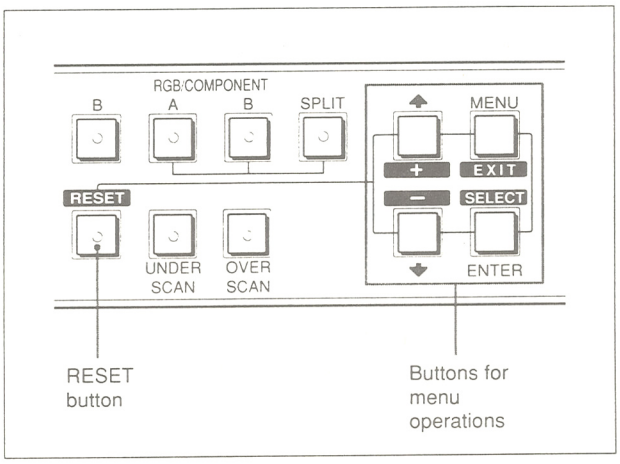

Button	To select menu item	To adjust selected menu item
MENU **EXIT**	return to the previous menu.	return to the previous menu.
ENTER **SELECT**	decide a selected item.	select an item.
↑ **+**	move the cursor (▶) upwards.	increase selected value.
– ↓	move the cursor (▶) downwards.	decrease selected value.
RESET		reset current adjustment value to the factory setting.

(The above items in white type correspond to the marks in the menu.)

The Contents of Menu Items

The following sentences show the details of each menu items.
[ ] indicates the factory setting position.

1 Main menu
Select an item and press the ENTER (SELECT) button to go to the following menu.

2 COLOR TEMP SELECT menu
Select the color temperature from among 6500K, 5600K and USER. USER is set to 6500K in the factory setting. You can adjust or change the color temperature in USER mode (a measuring instrument is needed).
[6500K]

Note

The color temperature of the USER mode can be adjusted in the range from 3200K to 10000K.
You can adjust the color temperature of the USER mode in the USER COLOR TEMP ADJUST menu (12) of the user service mode.
For the details, see USER COLOR TEMP ADJUST menu (12) on page 12.

3 PRESET menu
You can preset each control to a desired level and set it. If you set PRESET to ON, the REMOTE indicator lights up and the controls on the front panel do not work. The monitor operates with the internal memory settings. For adjustment, select the PRESET ADJUST screen.
[OFF]

4 CONFIG menu
Select an item for adjustment of the monitor.

5 PRESET ADJUST screen
Adjust CONTRAST, BRIGHT, CHROMA, PHASE, VOLUME, APERTURE in the PRESET menu.

6 CHROMA SET UP menu
Set to ON to adjust the internal decoder for CHROMA and PHASE (NTSC signal only) after AUTO ADJUST screen (11).
[OFF]

7 RGB A SYSTEM menu
To monitor the signal fed through the RGB/COMPONENT A connectors, set the RGB or COMP (component) signal and the INT SYNC (internal sync) or EXT SYNC (external sync) signal in this menu.
[RGB-INT SYNC]

8 RGB B SYSTEM menu
To monitor the signal fed through the RGB/COMPONENT B connectors, set the RGB or COMP (component) signal and the INT SYNC (internal sync) or EXT SYNC (external sync) signal in this menu.
[RGB-INT SYNC]

9 REMOTE (RS-232C) menu

Select one out of following three modes.

REMOTE OFF:

You can adjust settings and controls by the buttons and controls on the front panel.

The RS-232C connector does not function.

REMOTE ONLY:

You can adjust settings and controls through the RS-232C connector.

Buttons and controls on the front panel, except the menu operation ones, do not functin.

REMOTE & LOCAL:

You can adjust settings and controls both through the RS-232C connector and the front panel buttons.

Controls on the front panel do not function.

[REMOTE OFF]

10 LANGUAGE menu

You can select the language used for on-screen menus from the following five languages (English, German, French, Italian, Spanish). [ENGLISH]

11 AUTO ADJUST screen

Select the color bar signal (full, SMPTE, EIA) and press the ENTER (SELECT) button to start automatic adjustment for CHROMA and PHASE. For these adjustments to be valid, you must select ON in CHROMA SET UP menu (6).

User Service Mode

The user service mode is useful when adjusting the settings and controls except for the above.

To enter the user service mode, press and hold the MENU (EXIT) button until the following USER SERVICE 1 appears.

To move to the second page of the mode, select "NEXT PAGE" and to return to the first page, select "PREVIOUS PAGE".

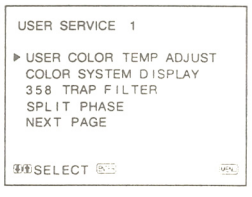

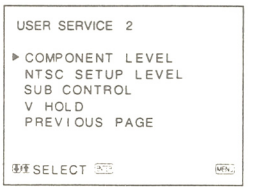

12 USER COLOR TEMP ADJUST menu

The value of adjustment in this menu works only when "USER" is selected in the COLOR TEMP SELECT menu (2).

ADJUST GAIN:

Adjusts the color balance (gain) of the USER mode.

ADJUST BIAS:

Adjusts the color balance (bias) of the USER mode.

COLOR TEMP RANGE:

When you adjust the color temperature in the USER mode, select a color temperature range before adjusting ADJUST GAIN and ADJUST BIAS. If the adjusted color temperature is between 3200K and 5000K, select "3200K-5000K." If the adjusted color temperature is between 5000K and 10000K, select "5000K-10000K." [5000K-10000K]

13 COLOR SYSTEM DISPLAY menu

Select the color system display mode. In AUTO, the kind of color system being used appears on the screen each time you change the signal input. [AUTO]

14 358 TRAP FILTER menu

Color spill or color noise may be eliminated if you select ON (NTSC signal only). Normally set it to OFF. [OFF]

15 SPLIT PHASE menu

When the SPLIT function is activated, if the lower side picture (the signal fed through the RGB/COMPONENT B input connectors) has some discrepancy of location with the upper side picture, adjust the SPLIT PHASE menu.

Each time you press the ↑(+) button, the lower side picture moves left.

Note

When the adjustment is made in the menu, the skew error will occur on the top of the lower side picture.

16 COMPONENT LEVEL menu

Select the component level from among three modes.

N10/SMPTE: for 100/0/100/0 signal

BETA 7.5: for 100/7.5/75/7.5 signal

BETA 0: for 100/0/75/0 signal [N10/SMPTE]

17 NTSC SETUP LEVEL menu

Select the NTSC setup level from two modes. The 7.5 setup level is mainly used in north America. The 0 setup level is mainly used in Japan. [0]

18 SUB CONTROL screen

You can finely adjust the controls on the front panel. CONTRAST, PHASE, CHROMA and BRIGHT controls have clicks at the center of their adjustment range. You can adjust the setting of the click position with this feature.

19 V HOLD screen

Adjust the vertical hold if the picture rolls vertically.

Note

If the rolling of the picture prevents you from watching the screen, select an input that has nothing connected.

Power Sources

PVM-2053MD

House Current

Connect the supplied AC power cord to the AC IN socket on the rear panel and to a wall outlet.

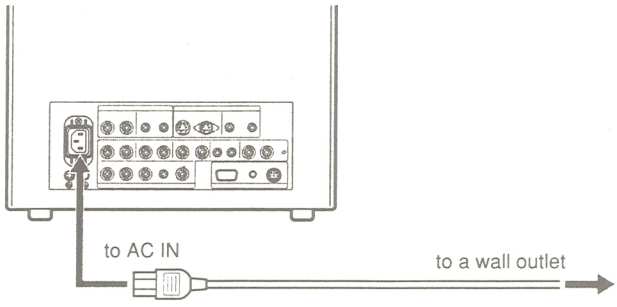

To connect an AC power cord securely with the AC plug holder

1

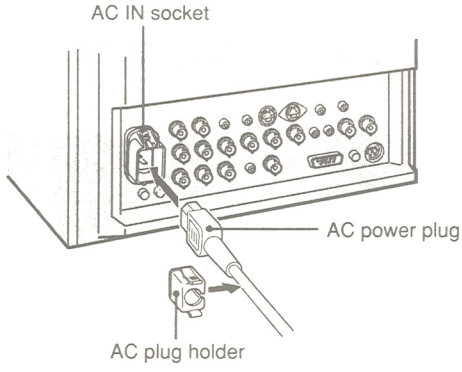

Plug the power cord into the AC IN socket. Then, attach the AC plug holder (supplied) on top of the AC power cord.

2

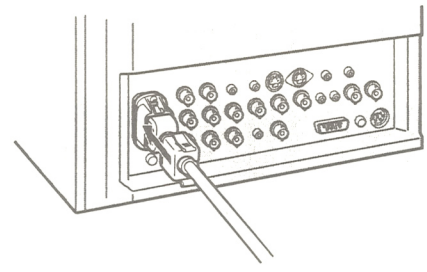

Slide the AC plug holder over the cord until it connects with the attached holder.

To remove the AC power cord

Pull out AC plug holder by squeezing the up and down sides.

Attaching the Splash Proof Covers

PVM-2053MD

In order to protect the ventilation holes from splashes (of medicines, etc.), attach the splash proof covers (supplied) as shown below.

1

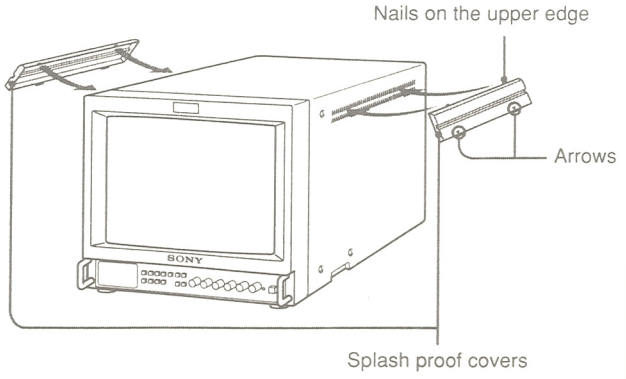

Making sure the arrows on the cover are facing down, hook the nails on the upper edge into the ventilation holes.

Note

Attach the splash proof covers to all them ventilation holes.

2

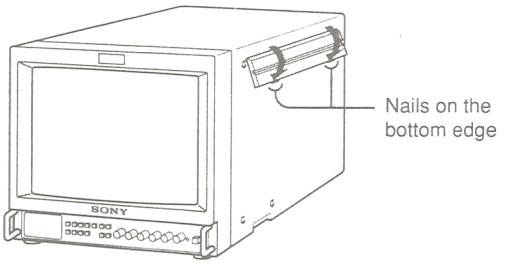

Push up the nails on the bottom edge and fit the cover into the lowest ventilation holes.
Attach the both covers to the left and right sides.

Attaching the Control Panel Cover

In order to protect the control buttons on the front panel from undesired touching, attach the supplied control panel cover.

1

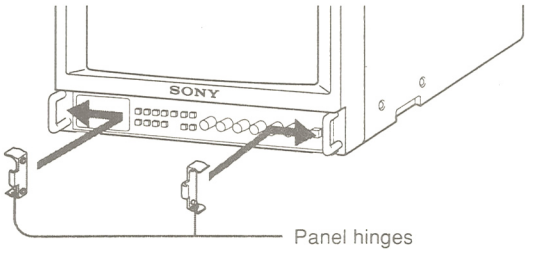

Attach the panel hinges to the left and right grips from the inner side.

2

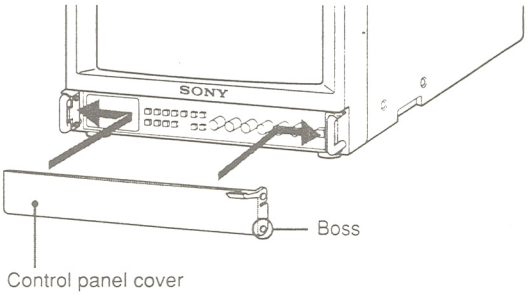

Fit the bosses on the both sides of the control panel cover into the lower holes of the panel hinges with bending the control panel cover a little.

SECTION 2
DISASSEMBLY

2-1. TOP COVER AND REAR COVER REMOVAL

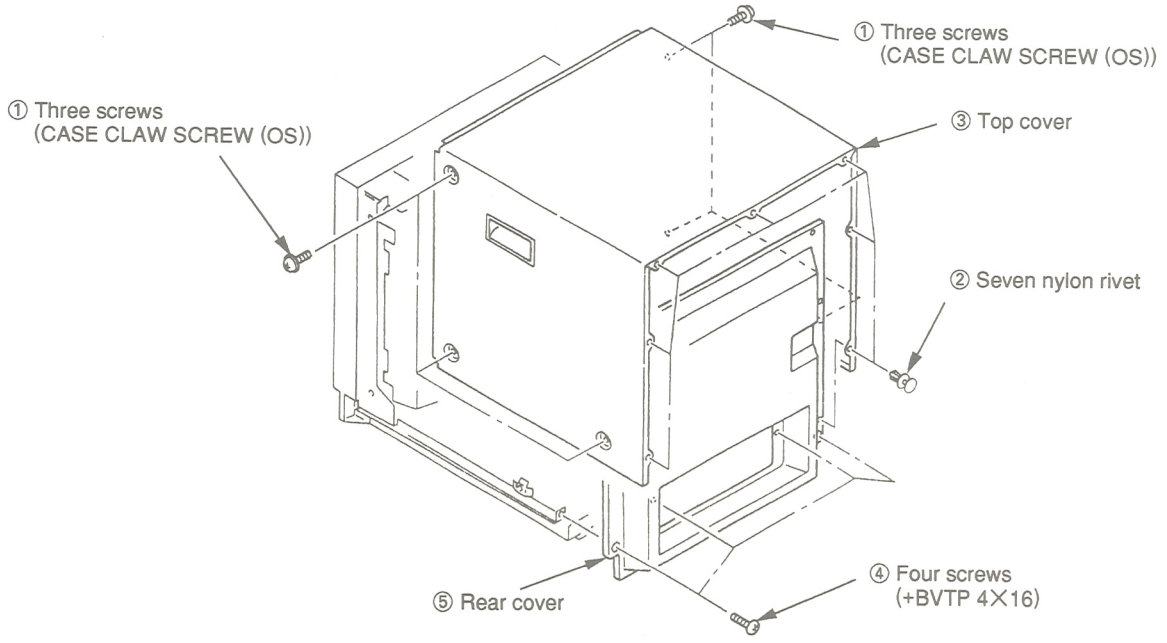

2-2. TERMINAL BOARD REMOVAL

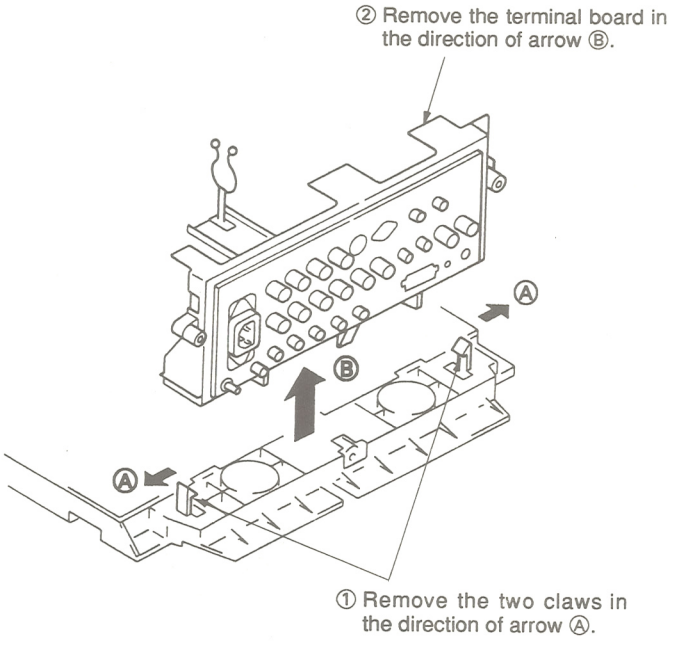

2-3. J, H BOARDS REMOVAL

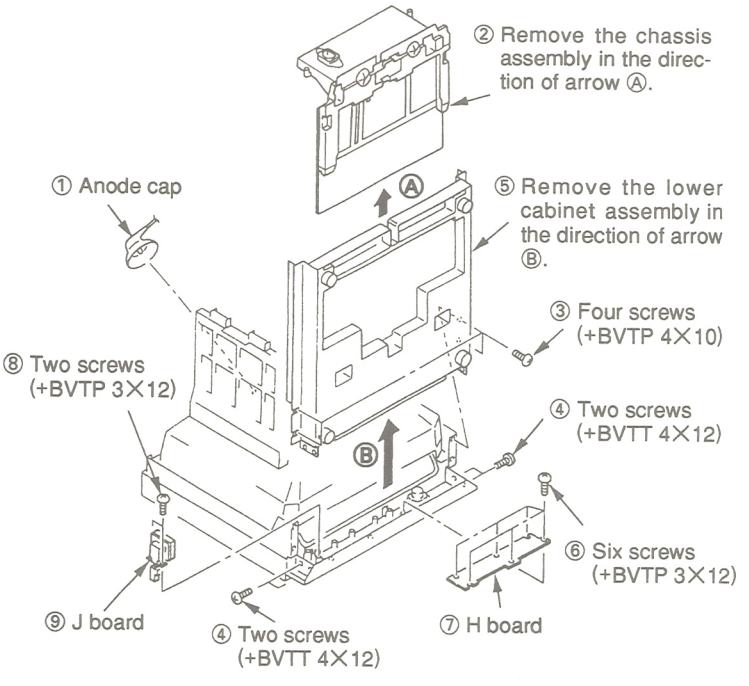

2-4. PICTURE TUBE REMOVAL

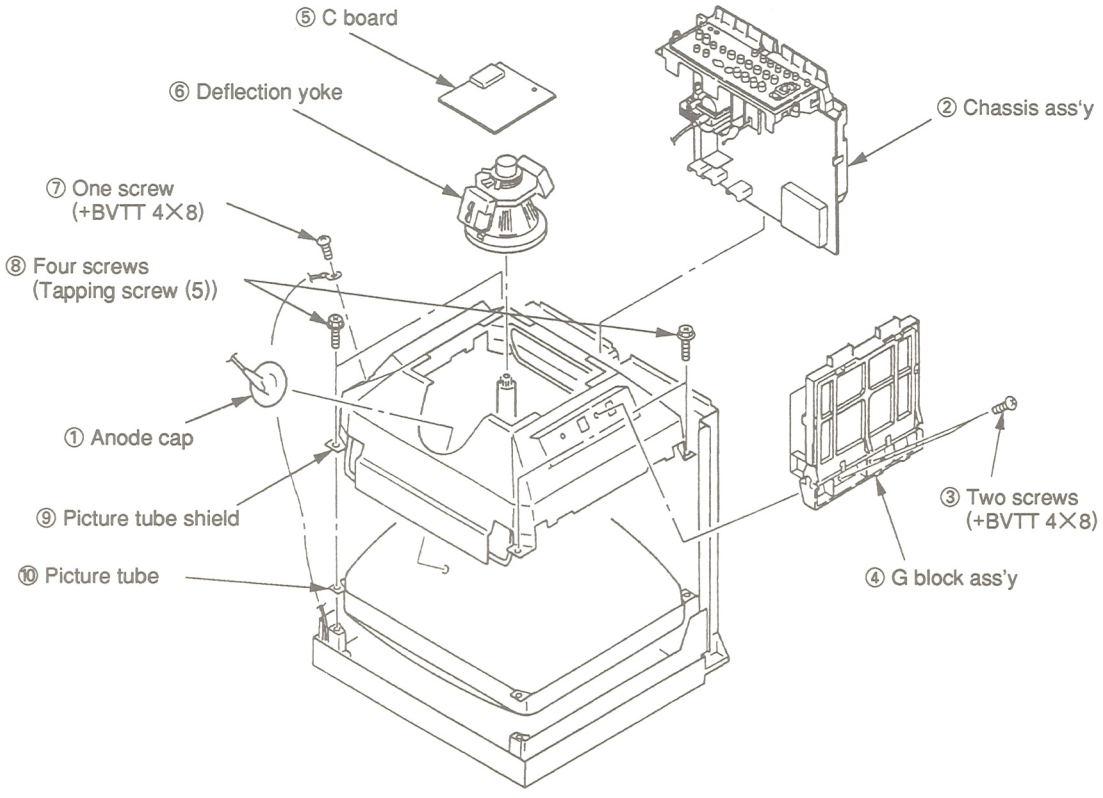

• REMOVAL OF ANODE-CAP

NOTE : Short circuit the anode of the picture tube and the anode cap to the metal chassis, CRT shield or carbon paint on the CRT, after removing the anode.

• REMOVING PROCEDURES

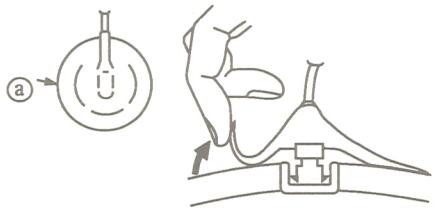

① Turn up one side of the rubber cap in the direction indicated by arrow ⓐ.

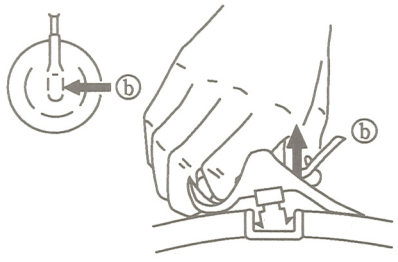

② Using a thumb pull up the rubber cap firmly in the direction indicated by the arrow ⓑ.

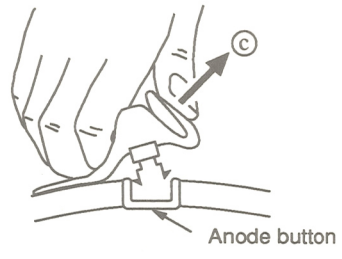

③ When one side of the rubber cap is separated from the anode button, the anode-cap can be removed by turning up the rubber cap and pulling up it in the direction of the arrow ⓒ.

• HOW TO HANDLE AN ANODE-CAP

① Don't hurt the surface of anode-caps with sharp shaped material!

② Don't press the rubber hardly not to hurt inside of anode-caps!
A material fitting called as shatter-hook terminal is built in the rubber.

③ Don't turn the foot of rubber over hardly!
The shatter-hook terminal will stick out or hurt the rubber.

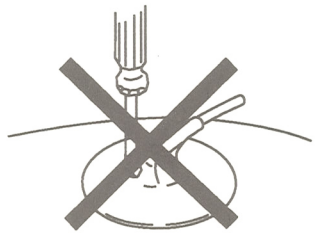

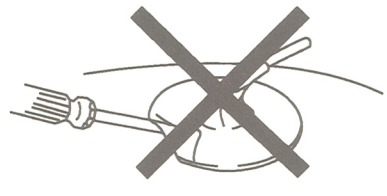

SECTION 3
SET-UP ADJUSTMENTS

3-1. PREPARATIONS (1)

Service Mode

This set is provided with a switch for service on the front panel that can be used to make various adjustments. The operation method of this switch is explained in detail below.

1. ENTERING THE SERVICE MODE

Simultaneously press the [ENTER] key and the [DEGAUSS] key shown on the display of the menu.

2. SERVICE MODE DISPLAY

(1)	(5)	(4)	(3)	(6)
(2)				

Range of Sevice Mode Display

(1) The service items are largely classified into 16 types displayed by titles.

(2) The names of the service items or READ / WRITE guidance, etc., are displayed. The names are dispalyed to the left and the guidance to the right.

(3) This is the serial number for each of the service items. 1-120.

(4) This is the adjustment data for the servise items that are now stored in the RAM. Adjustments can be made by changing these values, but as long as nothing is written to the ROM the adjustment values will be erased by turning off the power or by reading, so please be careful.

(5) When the adjustment data than is now displayed is identical with the data in the ROM, the cursor (▷) is displayed.

(6) The present status is displayed.

[*] : Writing to the ROM. Make sure not to turn off the power while this display is on.

[?] : ROM reading error. In this case, an image is output with the standard adjustment data that the microcomputer itself possesses.

[¿] : Problem in the I^2C bus.

3. FINISHING THE SERVICE MODE

Simultaneously press the [ENTER] key and the [DEGAUSS] key shown on the display of the menu.

4. EASY ON / OFF OF THE SERVICE MODE

If once entering the service mode after having turned on the power, easy ON / OFF is possible by once more pressing the A, B or C switch on the front panel (the LED lights) as long as the power is not turned off or as long as the service mode is not finished.

5. CHANGE OF POSITION OF THE SERVICE MODE DISPLAY

If the switch is continuously pressed when turning on in the above easy mode, the display position moves in the V direction. This method is used when the display is outside of the effective screen area.

6. CHANGE OF SERVICE ITEMS

The items are returned with the [MENU] key and forwarded with the [ENTER] key. When a key is continuously pressed, the operation will be repeated.

7. CHANGE OF SERVICE DATA

The service data is made larger with the [↑] key and smaller with the [↓] key. When continuously pressing the keys, the operation will be repeated.

8. READING OF SERVICE DATA

When reading data from the ROM to the RAM, press the RESET key once and check than the READ display is shown in the guidance, and then press the RESET key once again. The adjustment data that is written will return to its previous state, so please be careful.

9. WRITING OF SERVICE DATA

When writing data from the RAM to the ROM, press the [DEGAUSS] key once and check that the WRITE display is shown in the guidance, and then press the [DEGAUSS] key once again. Not only the displayed data will be written, but all data, so please be careful.

10. CARRYING OUT FACTORY RESETTING

In case the adjustment data has been destroyed for some reason, and you keep pressing the RESET key at the beginning of the above reading, the READ guidance will change to FACTORY RESET guidance in approximately 3 seconds so that the factory resetting can be carried out. By once again pressing the RESET key after this, resetting will be carried out ([*] will be displayed as status) and factory resetting will be executed. However, in case the data available at the time of shipment from the factory has been destroyed, or if the ROM has been replaced, etc., or if factory setting mentioned later on has been carried out, factory resetting is executed.

11. CARRYING OUT FACTORY SETTING

Make sure to make possible the above factory resetting by making a copy of the adjustment data when replacing the ROM. If you keep pressing the [DEGAUSS] key at the beginning of the above writing, the WRITE guidance will change into FACTORY RESET guidance after approximately 3 seconds. By once again pressing the [DEGAUSS] key after this, setting will be carried out ([*]will be dispalyed as status) and the data will be copied. By carrying out this operation, the selection items of the menu and the adjustment values will be reset to the standard conditions, so please be careful. If this operation is carried out once, it cannot be carried out again, but the FACTORY SET FLAG in the service mode can be set to 1.

ROM INITIAL WRITING VALUE OF SERVICE DATA

SERVICE MAP Ver 1.0MD (1 - 98)

No.	SERVICE ITEM		STD	No.	SERVICE ITEM		STD
1	NOR 50 DEF	H FREQUENCY	144	61	USER C/T ORG	BIAS <RED>	650
2		VIDEO PHASE	118	62		BIAS <GREEN>	512
3		V SIZE	179	63		BIAS <BLUE>	352
4	NOR 60 DEF	H FREQUENCY	150	64		GAIN <RED>	726
5		VIDEO PHASE	121	65		GAIN <GREEN>	700
6		V SIZE	177	66		GAIN <BLUE>	520
7	NOR DEF	V CENTER	111	67	W/B	SUB CON	180
8		H SIZE	112	68		SUB BRIGHT	69
9		PIN PHASE	103	69	OTHER	OSD POSITION	110
10		PIN AMP	110	70		SPLIT PHASE	0
11		LOWER PIN AMP	128	71		V HOLD	128
12		U/L PIN	134	72		H BLANKING	74
13		SEXY	128	73		H BLANKING <50>	63
14		V LINEARITY	140	74		O/S UPPER V BLK <50>	21
15		V BOW	32	75		O/S LOWER V BLK <50>	73
16		LOWER V BOW	32	76		V BLANKING <60>	117
17		V ANGLE	32	77		O/S UPPER V BLK <60>	26
18	U/S DEF	V SIZE <50>	149	78		O/S LOWER V BLK <60>	83
19		V SIZE <60>	146	79		HP POSITION	140
20		H SIZE	100	80		HP WIDTH	90
21		PIN PHASE	109	81	SYSTEM	358TRAP FILTER	0
22		PIN AMP	87	82		CAPTION VISION	0
23	O/S DEF	V SIZE <50>	192	83		COMPONENT LEVEL	2
24		V SIZE <60>	189	84		NTSC SETUP LEVEL	0
25		H SIZE	211	85		CHROMA SET UP	0
26		PIN PHASE	97	86		COLOR SYSTEM DISPLAY	0
27		PIN AMP	127	87		COLOR TEMPERATURE	0
28		LOWER PIN AMP	111	88		USER PRESET	0
29		U/L PIN	132	89		LANGUAGE	0
30		LOWER V BOW	32	90		RGB MODE A	0
31	COMPONENT	SUB PHASE	131	91		RGB MODE B	0
32		SUB CHROMA <NORMAL>	97	92		AGING MODE	0
33		SUB CHROMA <SMPTE>	157	93		MODEL	5
34		R-Y LEVEL	157	94		COLOR TEMP DISP 1	65
35	NTSC	BURST GATE PULSE WIDTH	36	95		COLOR TEMP DISP 2	56
36		CRYSTAL	54	96		REMOTE ADDRESS	1
37		PHASE	103	97		RESERVED	0
38		B-Y PHASE	230	98		FACTORY SET FLAG	0
39		CHROMA	118	99			
40		R-Y LEVEL	105	100			
41	PAL	CRYSTAL	65	101			
42		PHASE	76	102			
43		B-Y PHASE	125	103			
44		CHROMA	135	104			
45		R-Y LEVEL	123	105			
46	C/T1 ??00K	3200K SW	0	106			
47		BIAS <RED>	554	107			
48		BIAS <GREEN>	512	108			
49		BIAS <BLUE>	519	109			
50		GAIN <RED>	668	110			
51		GAIN <GREEN>	700	111			
52		GAIN <BLUE>	633	112			
53	C/T2 ??00K	3200K SW	0	113			
54		BIAS <RED>	650	114			
55		BIAS <GREEN>	512	115			
56		BIAS <BLUE>	352	116			
57		GAIN <RED>	726	117			
58		GAIN <GREEN>	700	118			
59		GAIN <BLUE>	520	119			
60	USER C/T ORG	3200K SW	0	120			

PREPARATIONS (2)

* When composite video or component signals are supplied, they must be supplied as below.

Signal		Signal Contents	Standard Level P-W
COMPOSITE VIDEO	358NT	100% WHITE	0.714V
		75% WHITE	0.536V
	PAL	100% WHITE	0.7V
		75% WHITE	0.525V
COMPONENT	BETA 0	100% WHITE Y	0.7V
		75% WHITE Y	0.525V
		75% COLOR B-Y, R-Y (This item only p-p)	0.7V
	SMPTE	100% WHITE Y	0.7V
		75% WHITE Y	0.525V
		75% COLOR B-Y, R-Y (This item only p-p)	0.525V
AUDIO		-0.5dBs	0.436Vrms

* In this document, terms inside boxes [ ] are names of service mode adjustments.

Example [60H-FREQ]

* After making adjustments in service mode, write the adjustment data before cutting off the power. If you cut off the power without writing, the results of your adjustments are all lost.

* Standard inspection conditions

Unless specifically specified otherwise in this document. the following conditions are used for adjustments and inspections.

APERTURE	MIN
BRIGHT	50% (Center click)
CHROMA	50% (Center click)
PHASE	50% (Center click)
CONTRAST	80% (Center click)
VOLUME	50%

3-2. WRITING MODEL DATA

1. In service mode, write in the following model data at [MODEL].
   PVM-1353MD/1953MD ····· 5
   PVM-1453MD/2053MD ····· 1
2. In service mode, write in the following data at [COLOR TEMP DISP 1].
   PVM-1353MD/1453MD ····· 65
   PVM-1953MD/2053MD ····· 65
3. In service mode, write in the following data at [COLOR TEMP DISP 2].
   PVM-1353MD/1453MD ····· 56
   PVM-1953MD/2053MD ····· 56

3-3. PICTURE OUTPUT

1. Set the AC input voltage.
   (1) Input the video and audio signals to the corresponding terminals on the connector panel.
   (2) Set the sliduck AC voltage as shown on the right.

Model	Voltage
PVM-1353MD/1953MD	AC120 ± 3V (Distortion rate : 3% or less)
PVM-1453MD/2053MD	AC220 ± 3V (Distortion rate : 3% or less)

3-4. LANDING ADJUSTMENT

1. Preparations
   1) To reduce the influence of geomagnetism, face the set's CRT screen east or west.
   2) Loosen the deflection yoke fixture and lower the deflection yoke to the rear.
   3) Switch on the Power switch and degauss with the degausser.
   4) Adjust the deflection yoke tilt.
2. Adjustment
   1) CONT ····· MIN
      BRT····· Position providing good vision
   2) The rough adjustments of the white balance, G2, and convergence must be completed already.
   3) Set green-only.
   4) Adjust the purity knob so that the green comes to the center of the screen. Make the red and blue about even. Fig. 1
   5) Switch to blue only, red only, and green only and verify each. Fig. 1, 2, and 3
   6) Bring the deflection yoke gradually forward and adjust the deflection yoke so that the R and B at both sides of the screen become green. Fig. 2 → 3
   7) If the deflection yoke comes too far forward, you will see the pattern shown in Figure 4. If that happens, lower the deflection yoke to the rear. Fig. 4 → 3
   8) Switch the single color switch to B and verify the single color. Fig. 6
   9) Switch the single color switch to R and verify the single color. Fig. 9
   10) When one of the colors does not become the single color correctly, check by repeating Items 7 and 8 based on the single color not coming into adjustment.
   If you can not obtain landing in the corners, paste on magnets.
   11) Switch to an all-white signal and check the uniformity.
   12) When the deflection yoke position is determined, fasten it with the fixture.

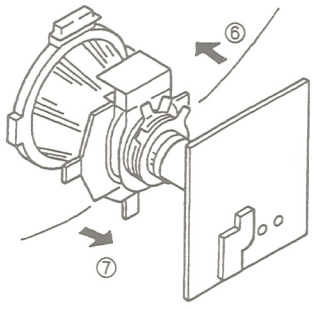

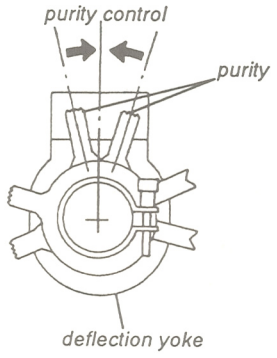

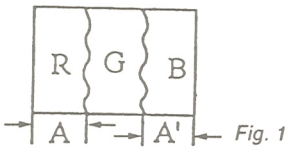

Fig. 1

Fig. 2

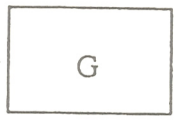

Fig. 3

Fig. 4

Fig. 5

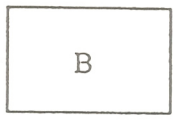

Fig. 6

Fig. 7

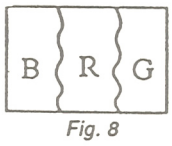

Fig. 8

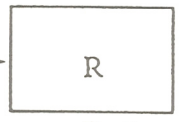

Fig. 9

Fig. 10

3-5. CONVERGENCE ADJUSTMENT

1. Input a dot pattern signal.
   CONT ····· Position providing good vision
   BRT····· MIN
2. Align the horizontal R, G, and B dots at the center of the screen with the H-STAT VR. (*1)
   *1 : If the H-CENTER adjustment was after the H-STAT adjustment, re-adjust the H-STAT.
   (The H-CENT VR changes the H-STAT too.)
3. Align the R, G, and B at the center of the screen with the V-STAT magnets. (*2)
   *2 : After the V-STAT adjustment, paint on the knobs to lock them.

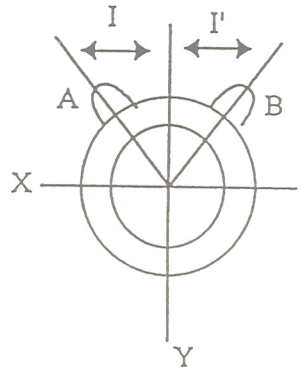

Good example

V-STAT magnet knobs
While keeping the angles for A and B equal (I=I'), align the vertical convergence.

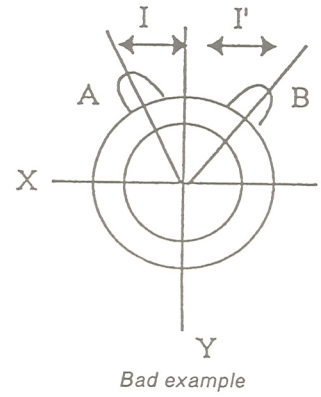

Bad example

If the A and B knobs are not symmetrical (I≠I'), this has bad effects. The focus may deteriorate and beam striking may occur.

4. For HMC, use the 6-pole magnet to adjust the R and B dots to be symmetrical left and right about the G dot. (*1)

*1 :

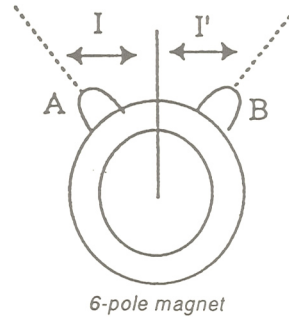

6-pole magnet

The HMC adjustment changes the opening of the 6-pole magnet.

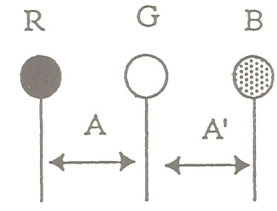

Adjust the 6-pole magnet so that A=A'. You must maintain the relationship I≠I' while moving the magnet.

5. For VMC, use the 6-pole magnet to adjust the R and B dots to be symmetrical above and below the G dot. (*2)

*2 :

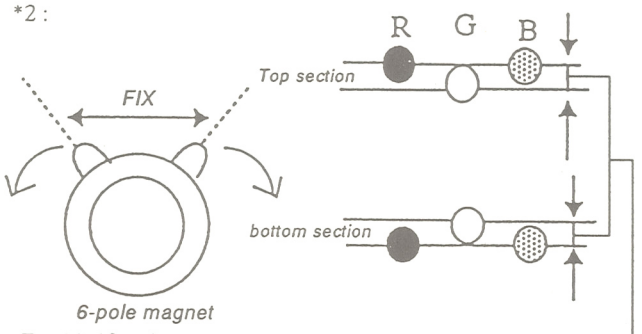

The VMC adjustment does not change the opening of the 6-pole magnet, but turns it left and right.

24 Adjust so that the displacement up and down are the same.

6. Adjust by repeating the adjustments in Items 2 through 5. (*3)
   *3 : The above adjustment may affect the landing, so after this adjustment, check the landing again.
7. After the adjustment is complete, paint on the knobs to lock them.

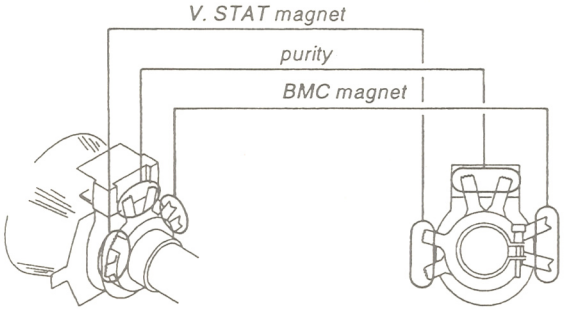

3-6. DEFLECTION YOKE NECK ROTATION ADJUSTMENT

If there is misconvergence at both sides on the X or Y axis of the screen, turn the neck of the deflection yoke in the direction of the arrow to reduce the misconvergence for the entire CRT screen to within the tolerance.

1. Reverse misconvergence pattern

Turn the deflection yoke neck down.

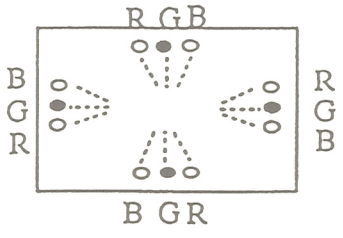

Positive misconvergence pattern
Turn the deflection yoke neck up.

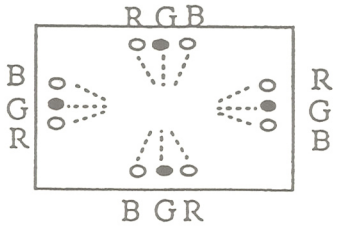

Pattern when deflection yoke too far to the left

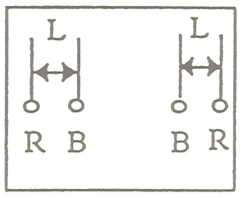

As viewed from the CRT screen, turn the deflection yoke neck to the right.

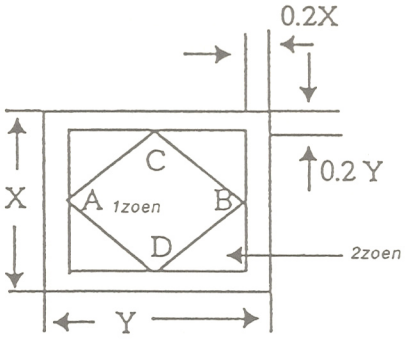

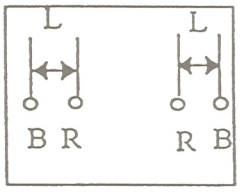

Pattern when deflection yoke too far to the right

2. Insert the three wedges in the deflection yoke and CRT funnel surface to fasten the deflection yoke.

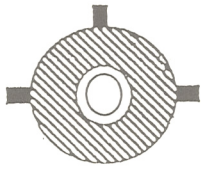

14" Wedge positions

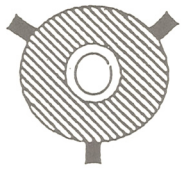

20" Wedge positions

3. The pattern below can not be corrected by turning the neck.

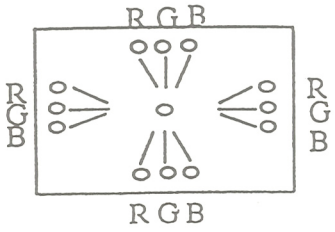

* Gun rotation
The beam is twisted at both sides on the X axis and Y axis.

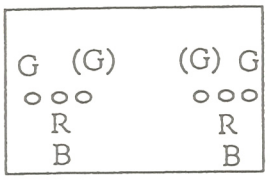

* HCR large (small)
At both sides of the screen, the G raster horizontal component is wider (narrower) than those of the R and B rasters.

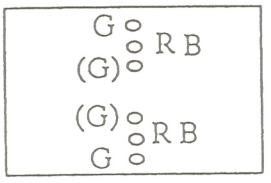

* VCR large (small)
At both sides of the screen, the G raster vertical component is wider (narrower) than those of the R and B rasters.

3-7. G2 ADJUSTMENT

1. Input a 525 monoscope signal.
2. Connect the oscilloscope to A board TP403.
3. Of the three reference pulses, measure the lowest one.
4. With the Screen VR, adjust so that left end of the waveform is : 1.40 ± 0.1V

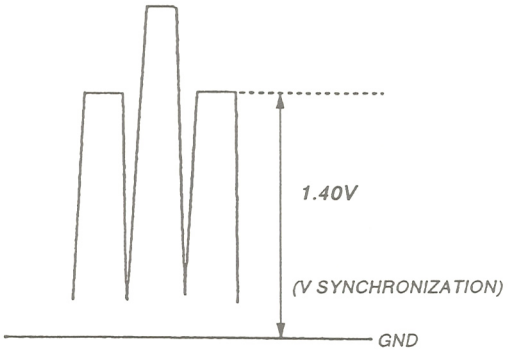

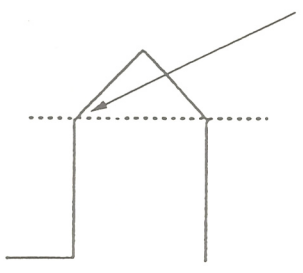

Since the waveform is triangular as shown on the left, adjust the left end to be 1.40V.

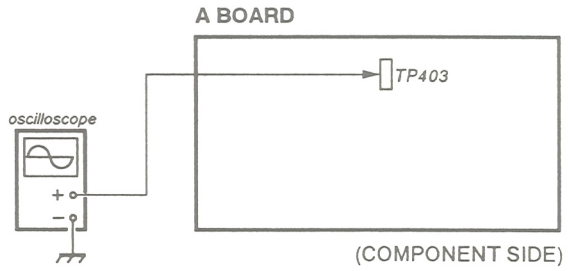

3-8. WHITE BALANCE ADJUSTMENT

For measuring equipment, use a color analyzer. (for example from Minolta, etc.)

1. Input a 525 monoscope signal.
   (Input from Line A with no burst.)
2. Set :
   CONT ····· 0%
   BRT····· 50%
3. On a 20-tone gray scale, adjust service mode SUB BRIGHT so that
   0 and 5 IRE → cut off
   10 IRE → slight glow
4. **Input 525 all-white (no burst).**
5. Set CONT to 80%.
6. Adjust the all-white signal luminance so that the screen luminance is 3 NIT.
7. **Press MENU and select COL TEMP/SEL.**
8. **Select T1 : 6500K.**
9. Put the unit into service mode. (*1)
   ***1 : Set 3200 K SW to 0 for both T1 and T2.**
10. **Adjust to the standard values with C/T1 XX00K BIAS.**
    (G must be fixed at "512".) (*2)
    *2 : Adjust the cut-off to be 3 NIT.
    Spec. 6500K + 8M PCD
11. Switch the all-white signal luminance to 100 IRE.
12. **Adjust to the Standard values with <RED> and <BLUE> of C/T1 GAIN XX00 K.**
    (G must be fixed at "700")
13. Repeat Items 10, 11 and 12 until the adjustment is complete, then write the adjustment data.
14. Press MENU and select COL TEMP/BAL.
15. **Select T2 : 5600K.**
16. **In the same manner as in Items 10, 11, 12 and 13 make the C/T2 5600K BIAS and C/T2 5600K GAIN adjustments.**
    Spec. 5600K + 8M PCD

3-9. SUB BRT ADJUSTMENT

1. Input a 525 monoscope signal.
2. CONT ····· MIN
   BRT····· CENTER (50%)
3. Put the unit into service mode and select SUB BRIGHT
4. Adjust SUB BRIGHT so that 10 IRE gives a slight glow and 10 IRE gives cut off.

3-10. FOCUS ADJUSTMENT

Note : PVM-1353MD/1453MD are adjusted with RV707 on the C board.
PVM-1953MD/2053MD are adjusted with the RV at the top of the FBT main nuit.

1. Input a 525 monoscope signal. (PVM-1353MD/1953MD ONLY)
   Input a 625 monoscope signal. (PVM-1453MD/2053MD ONLY)
2. Adjust the focus to optimize the focus on the characters "30" at the center of the screen.
3. Switch to an all-white signal and check the uniformity.

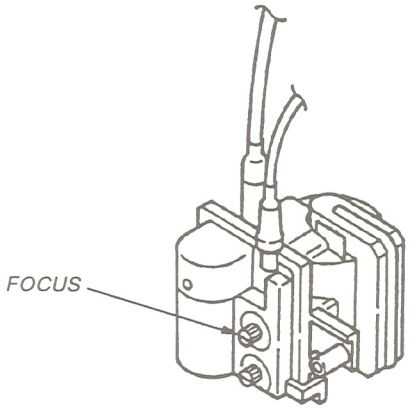

SECTION 4
SAFETY RELATED ADJUSTMENT

The following adjustments should always be performed when replacing the following components (marked with ⊠ , ◪ on the schematic diagram).

+B detection ·····⊠ R1535
Tertiary coil detection·····⊠ R1536
Part replaced (◪)
Hold Down Circuit ·····◪ A board IC500, IC507, D501, D533, C506, C512, C523, C549, C592, R506, R518, R519, R551, R1536, R1537, R1560, T501

Beam Current Protector Circuit·····◪ A board Q500, Q511, C513, R508, R515, R516, R517
B+ Regulator Circuit ·····◪ A board R1535
◪ G board IC602, C603

B+ VOLTAGE CONFIRMATION

Standard : less than 117.0VDC
Check Condition : Input voltage : 110 $\pm^{2}_{0}$ VAC
Note : Use NF Power Supply or make sure that distortion factor is 3% or less.
Input signal : Monoscope signal
Controls : BRT & CONT ⇨ Initial reset

HOLD-DOWN CIRCUIT VOLTAGE CONFIRMATION

(1) Hold down circuit (B+ Actuation)

a) When IABL = 1000 ± 50μA, raster goes out at less than 130.5 $\pm^{0.0}_{1.0}$ V by applying an external DC voltage to IC500 ② pin (TP502).

Input signal : ALL white

b) When IABL = 120 ± 20μA, raster goes out at less than 133.5 $\pm^{0.0}_{1.0}$ V by applying an external DC voltage to IC500 ② pin (TP502).

Input signal : Dot

(2) Hold down circuit (Tertiary coil detection voltage)
Confirmatory item : 110.0V voltage should be applied to the ⑪ pin of IC500.

a) When IABL = 1000±50μA, raster goes out when applying less than DC 148.0V voltage to the ⑪ pin (TP503) of IC500 from outside.

Input signal : ALL white

b) When IABL = 120 ± 20μA, raster goes out when applying less than DC 148.5V voltage to the ⑪ pin (TP503) of IC500 from outside.

Input signal : Dot

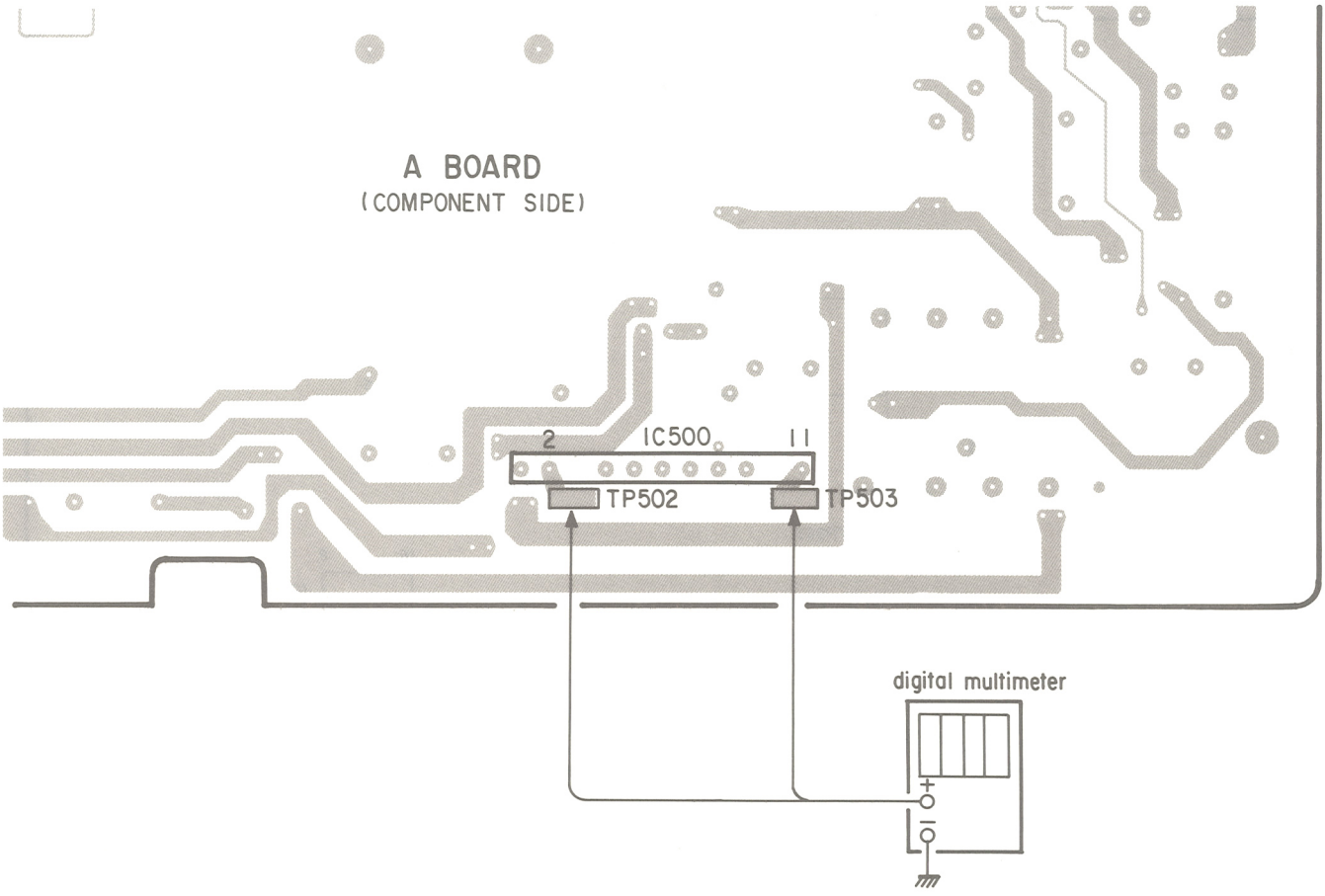
A BOARD
(COMPONENT SIDE)
2
IC500
11
TP502
TP503
digital multimeter
+
−

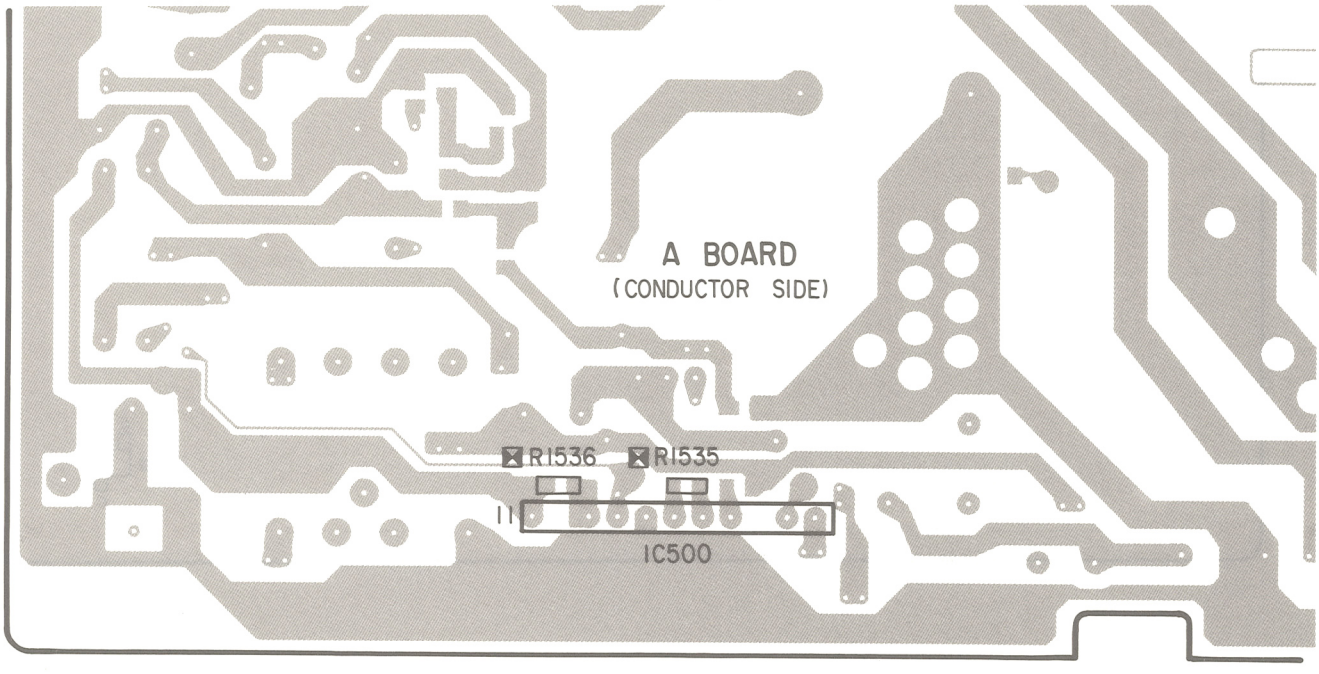
A BOARD
(CONDUCTOR SIDE)
R1536
R1535
11
IC500

SECTION 5
CIRCUIT ADJUSTMENTS

5-1. A BOARD ADJUSTMENT

A BOARD – COMPONENT SIDE –

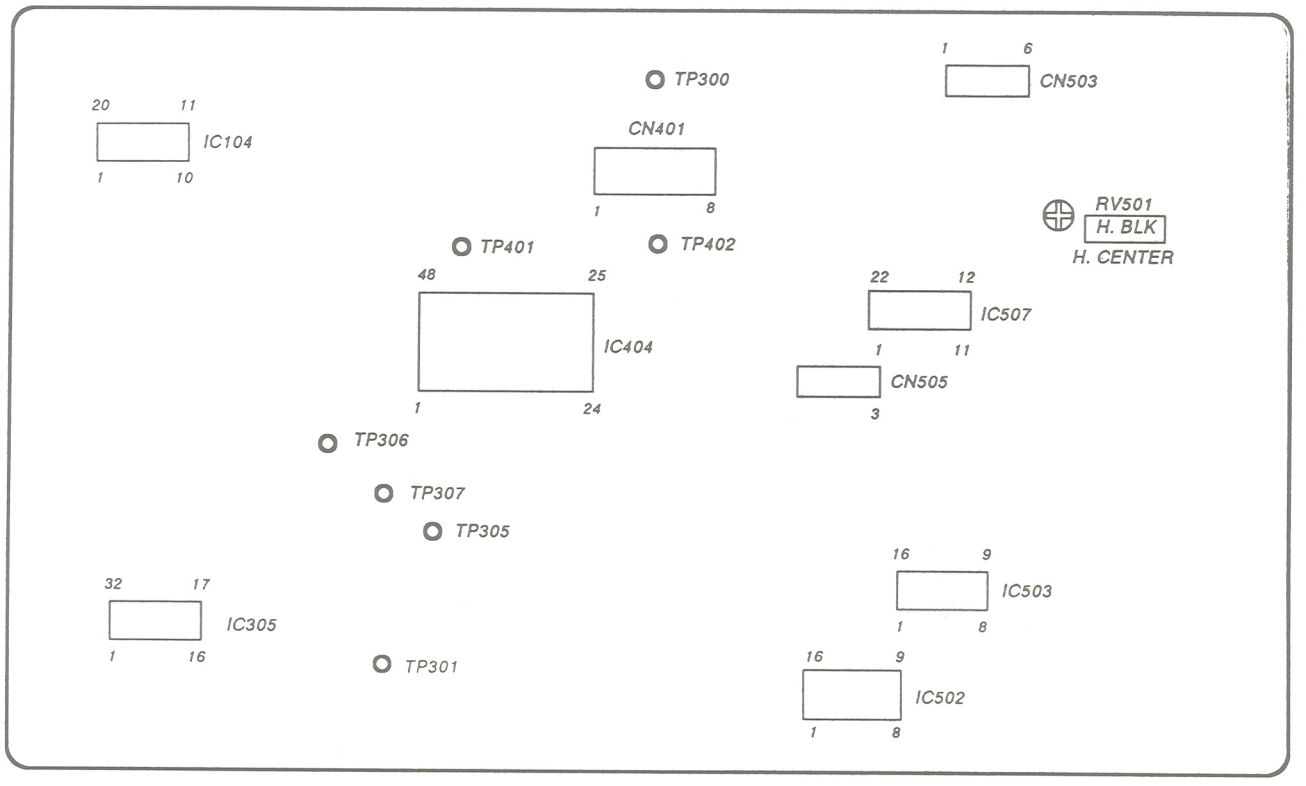

A BOARD – CONDUCTOR SIDE –

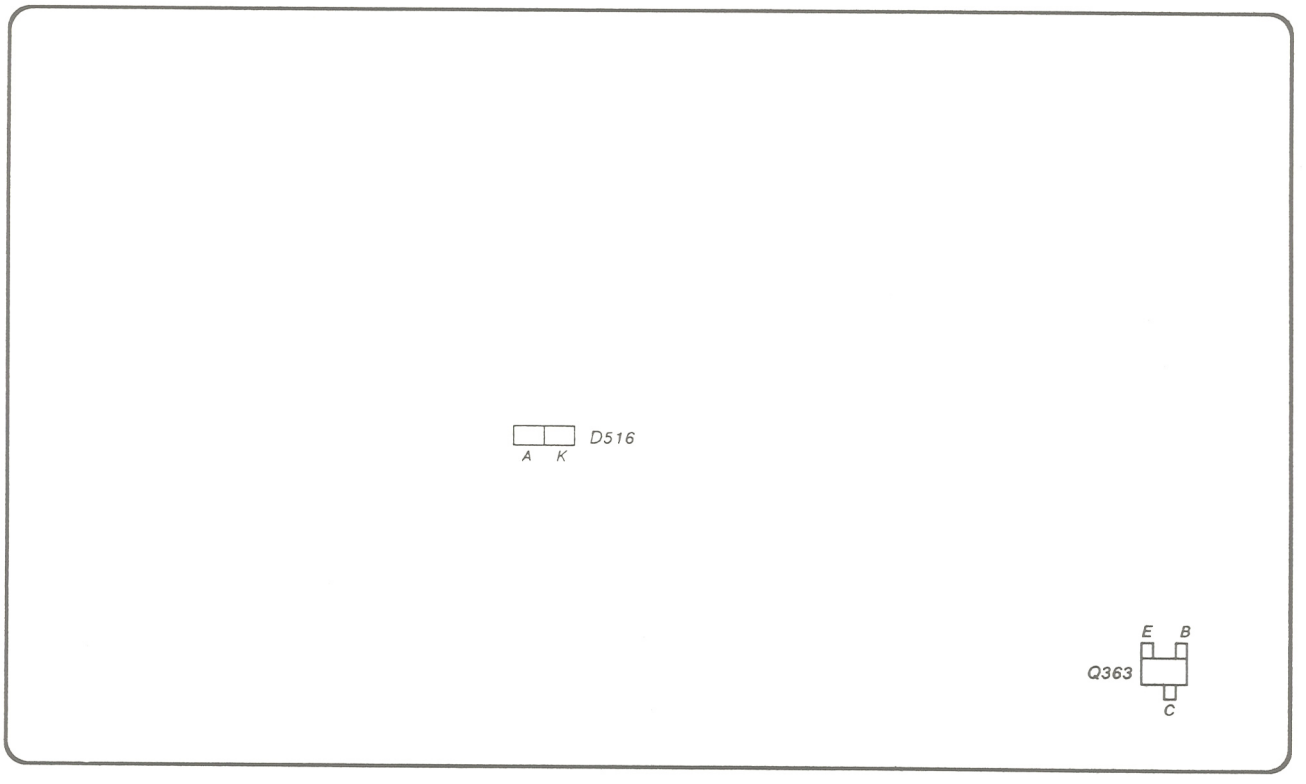

I. Preparations

* When composite video or component signals are supplied from connector CN301, they must be supplied taking into account the effect of the Q board as indicated on the right.
  The levels of the signals supplied must be within ± 2% of the standard on the right.

Signal		Signal Contents	Standard Level (Pedestal-White)	Reduction Ratio	Connector Feed Level (Pedestal-White)
COMPOSITE VIDEO (75% COLOR BAR)	358NT	100% WHITE	0.714V	93%	0.664V
		75% WHITE	0.536V	93%	0.498V
		BURST (GREEN) (This item only P-P)	286mV (632mV)	94% (94%)	269mV (594mV)
	PAL	100% WHITE	0.7V	94%	0.651V
		75% WHITE	0.525V	94%	0.488V
		PAL BURST (GREEN) (This item only P-P)	300mV (664mV)	94% (94%)	282mV (624mV)
COMPONENT (75% COLOR BAR)	BETA0	100% WHITE Y	0.7V	94.8%	0.664V
		75% WHITE Y	0.525V	94.8%	0.498V
		75% COLOR B-Y, R-Y (This item only P-P)	0.7V	94.8%	0.664V
	SMPTE	100% WHITE Y	0.7V	94.8%	0.664V
		75% WHITE Y	0.525V	94.8%	0.498V
		75% COLOR B-Y, R-Y (This item only P-P)	0.525V	94.8%	0.498V

* In this document, terms inside boxes [ ] are names of service mode adjustments.
  Example [60H-FREQ]
* CONT 80% is the center click position for the user control.

II. Deflection System Adjustment

1. ADJUSTING THE HORIZONTAL OSCILLATION FREQUENCY

1. Input a 525 monoscope signal.
2. Set :
   CONT····· 80%
   BRT·····50%
3. Put the unit into service mode.
4. Drop A board IC507 Pin 1 to ground with a 100μ/16V electrolytic capacitor. (Ground must use CN505 Pin 3.)
   Or plug the H-FREQ tool into CN505.
5. Adjust [60H-FREQ] so that the diagonal lines on the screen become vertical lines. (Fig. 1)
6. Input a 625 monoscope signal.
7. Adjust [50H-FREQ] so that the diagonal lines on the screen become vertical lines. (Fig. 1)

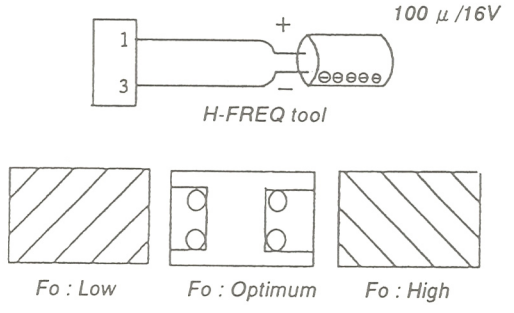

Fig. 1

2. H-BLK Adjustment

1. Input a 525 monoscope signal.
2. Set :
   CONT ····· 80%
   BRT ····· 50%
3. Put the unit into service mode.
4. Observe the anode of D516 or TP300 with the oscilloscope and adjust [H-BLK] to obtain the waveform in Fig. 2.

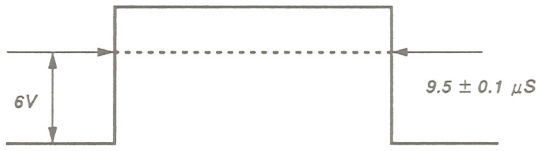

Fig. 2

3. PICTURE PHASE Adjustment

1. Input a 525 monoscope signal.
2. Put the unit into under scan mode.
3. Set :
   CONT ····· Min.
   BRT ····· Max.
4. Put the unit into service mode.
5. Use [U/S H SIZE] to adjust the size of the monoscope white frame to be about 1 cm to the inside of the limits of the effective screen.
6. Turn RV501 (H-CENT) and adjust so that B=B'.
7. Adjust [60 VIDEO PHASE] so that the signal region comes to the center (A=A') of the deflection region. (Fig. 3)

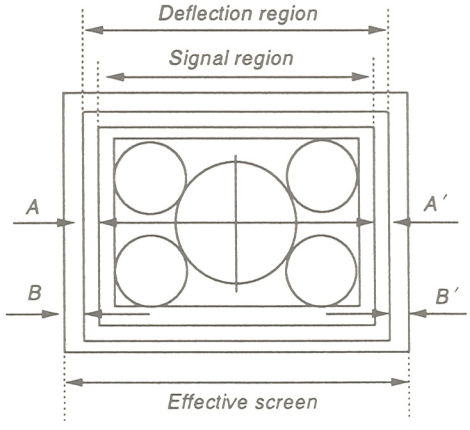

Fig. 3

8. Input a 625 monoscope signal.
9. Adjust [50 VIDEO PHASE] in the same manner.

4. V•BLK Adjustment

1. Input a 525 monoscope signal.
2. Put the unit into under scan mode.
3. Set :
   CONT ····· Min.
   BRT ····· Max.
4. Put the unit into service mode.
5. Adjust [V BLK (60)] so that before 0.5H of the white frame on the top of the monoscope is barely unblocked.
6. End under scan mode and put the unit into Normal 16:9 mode.
7. Input a 625 monoscope signal.
8. Adjust [V BLK (50)] in the same manner as in 5 above.

5. VERTICAL DEFLECTION SECTION Adjustment

Normal V. Size Standards

	525	625
4 : 3	11.75 ± 0.2 frames	11.2 ± 0.2 frames

1. Input a 525 monoscope signal.
2. Set :
   CONT ····· 80%
   BRT ····· 50%
3. Put the unit into service mode.
4. Roughly adjust 4 : 3 NOR [V-SIZE 60] so that the size becomes to 12 frames.
   Adjust the vertical linearity with [V-LIN].
   Adjust the vertical centering with [V-CENT 60] . (Refer to Note 1.)
   Adjust 4 : 3 NOR [V-SIZE 60] so that the size becomes to the standard value.
5. Input a 625 monoscope signal.
6. Roughly adjust 4 : 3 NOR [V-SIZE 50] so that the size becomes to 11 frames.
   Adjust the vertical centering with [V-CENT 50] . (Refer to Note 1.)
   Adjust 4 : 3 NOR [V-SIZE 50] so that the size becomes to the standard value.

Note 1:

Reconfirmation is necessary for V. CENT adjustment after V. LIN adjusted.

6. HORIZONTAL DEFLECTION SECTION Adjustment (NORMAL SCAN Adjustment)

1. Input a 525 monoscope signal.
2. Set :
   CONT ····· 80%
   BRT ····· 50%
3. Put the unit into service mode.
4. Roughly adjust [NOR H SIZE] so that the size is 15.75 frames.
5. Adjust the horizontal deflection section with [NOR PIN AMP] [NOR PIN PHASE] [NOR U/L PIN] [SEXY] [V BOW] [V ANGL] [NOR H SIZE] [LOW PIN AMP] [LOW V BOW]. (While adjusting the parallelogram distortion and bow distortion with V. ANGL and BOW, adjust the horizontal and vertical lines of the screen becomes straight lines.)
6. Input a 625 monoscope signal.
7. Confirm that the screen is normal.

Normal H.Size Standards

	525	625
4 : 3	15.75 ± 0.2 frames	15.0 ± 0.2 frames

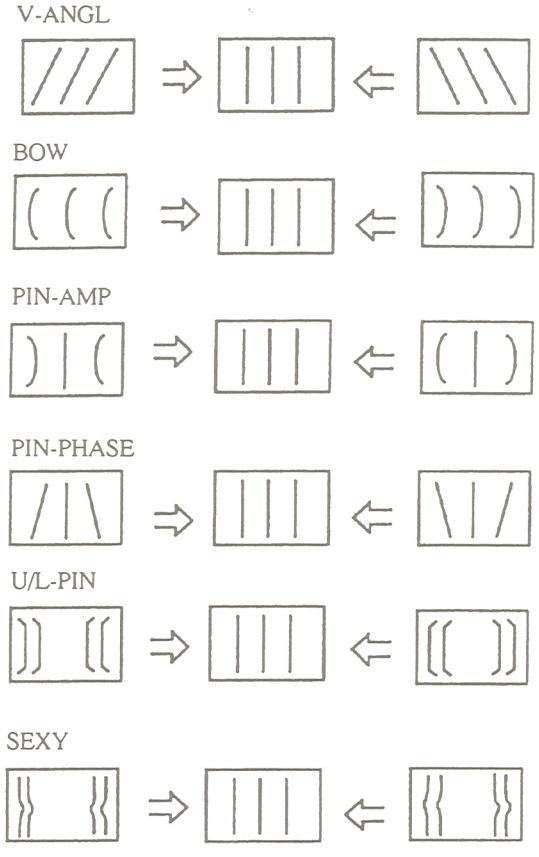

Fig. 4

7. HORIZONTAL DEFLECTION SECTION Adjustment (UNDER SCAN Adjustment)

Standard value

		525	625
14"	U/S H-SIZE U/S V-SIZE	252 ± 2mm 188 ± 2mm	←
20"	U/S H-SIZE U/S V-SIZE	364 ± 3mm 272 ± 3mm	←

1. Input a 525 monoscope signal.
2. Set :
   CONT ····· 80%
   BRT ····· 50%
3. Set to U/S mode.
4. Set to service mode.
5. Adjust [U/S V. SIZE <60>] so that UNDER V. SIZE becomes within the standard.
6. Adjust [U/S. H. SIZE] so that UNDER H. SIZE becomes within the standard.
7. Adjust [U/S PIN AMP] and [U/S PIN PHASE].
   (Steps 5., 6. and 7. explains tracking adjustment.)
8. It's not favorable when the square white line is bulging out of the effective screen after adjusted.
9. Input a 625 monoscope signal.
10. Adjust [U/S V. SIZE <50>] becomes within the standard value.

8. OVER SCAN Adjustment

1. Input a 525 monoscope signal.
2. Set :
   CONT ·····80% (center click)
   BRT ·····50%
3. Set to O/S mode.
4. Set to service mode.
5. Adjust [O/S H. SIZE] and [O/S V. SIZE <60>] so that H. SIZE becomes 13.6 frames and V. SIZE becomes 10.2 frames.
6. Adjust horizontal deflection section with [O/S PIN AMP] [O/S PIN PHASE] [O/S U/L PIN] [O/S LOW PIN AMP] [O/S LOW V. BOW].
7. Input a 625 monoscope signal.
8. Adjust [O/S V SIZE <50>] becomes within the standard value.

Standard value

	525	625
O/S H. SIZE	13.6 $\pm^{0.8}_{0}$ frames	13.0 $\pm^{0.8}_{0}$ frames
O/S V. SIZE	10.2 $\pm^{0.8}_{0}$ frames	9.8 $\pm^{0.8}_{0}$ frames

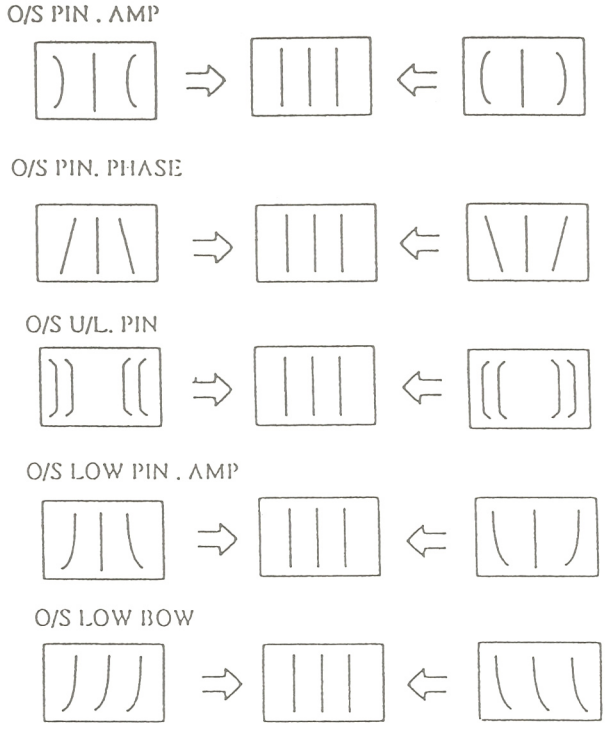

Fig. 5

9. OSD POSITION Adjustment

1. Input a 525 color bar signal.
2. Connect the oscilloscope probes to TP300 (H-BLK) and IC104 Pin 14.
3. Adjust [OSD POSITION] so that the gap between the rising edge of the H-BLK waveform and the right edge character (the right edge of the "□" for service mode [OSD POSITION]) is : 57 μS ± 0.2 μS

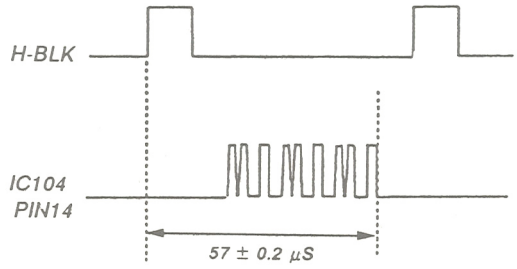

Fig. 6

10. WRITING THE ADJUSTMENT

1. Write the adjustment results into memory.
   Note : If you cut off the power before writing, the results of your adjustments are all lost.

Ⅲ. SIGNAL SYSTEM ADJUSTMENT

1. SUB CON ADJUSTMENT

*This adjustment ought to have completed before HUE adjustment of NTSC 358/443 and PAL.

1. Input a vertical white line signal.
   Note : Use a vertical white line signal
   (525 no burst, H width 3μS, 100IRE).
2. Set :
   CONT····· 80%
   BRT·····50%
3. Connect the oscilloscope probe to A board CN401 Pin 3.
4. Put the unit into service mode.
5. Adjust SUB BRT .
6. Adjust the pedestal or the distance between the sync tip and white with [SUB CON (4 : 3 NOR)] .

SUB CON (4 : 3 NOR) (Fig. 7).

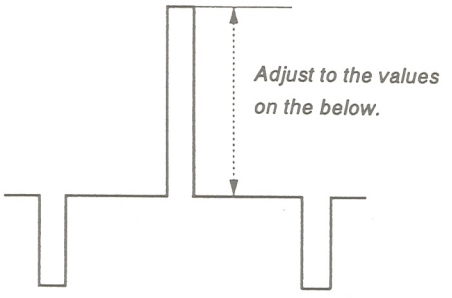

SUB-CON 4 : 3, NOR

	20"	14"
4 : 3	1.55Vp-p	1.50Vp-p

Fig. 7

2. SUB PHASE Adjustment

1. Input a component color bar (R-Y) and EXT SYNC (Beta 0 level signal).
2. Put the unit into Ext Sync mode.
3. Connect the oscilloscope probe to IC404 Pin 30 or TP402.
4. Put the unit into service mode.
5. Adjust [SUB PHASE] to minimize the output waveform (15 mVp-p max.) (Fig. 8)

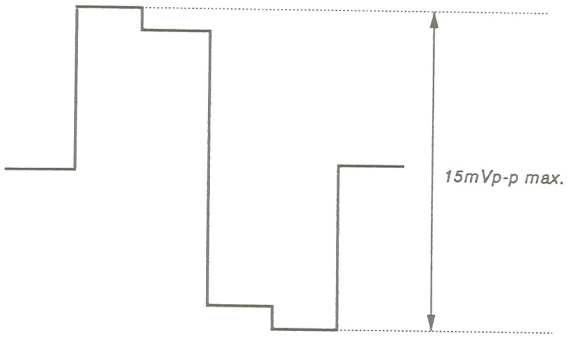

Fig. 8

3. SUB CHROMA Adjustment

1. Input a component color bar (R-Y, Y, B-Y). (Beta 0 level signal).
2. From the menu, make the Component Level Beta 0.
3. Connect the oscilloscope probe to IC404 Pin 30 or TP402.
4. Put the unit into service mode.
5. Using [SUB CHROMA NORMAL], adjust so that the tops of the waveform line up as in the diagram below. (Fig. 9)

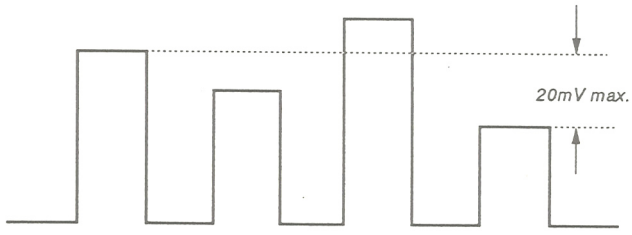

Adjust so that the levels of the first peak and the fourth peak are the same.

Fig. 9

4. R-Y LEVEL ADJUSTMENT

1. Input a component color bar (R-Y, Y, B-Y). (Beta 0 level signal).
2. From the menu, make the Component Level Beta 0.
3. Connect the oscilloscope probe to IC404 Pin 41 or TP401.
4. Put the unit into service mode.
5. Using [R-Y LEVEL COMPONENT], adjust so that the tops of the waveform line up as in the diagram below. (Fig. 10)

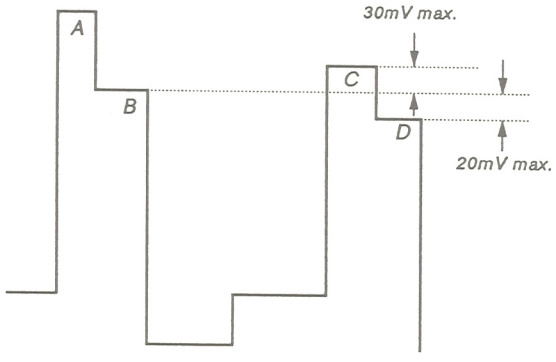

Fig. 10

Adjust so that B=D above (20 mV max.) Check that the difference between D and C is no greater than 30 mV

5. SMPTE SUB COLOR Adjustment

1. Input a component color bar (R-Y, Y, B-Y). (SMPTE level signal).
2. From the menu, make the Component Level N10/SMPTE.
3. Connect the oscilloscope probe to IC404 Pin 30 or TP402.
4. Put the unit into service mode.
5. In the same manner as in 4-5, adjust [SUB CHROMA N10/SMPTE].

6. BURST GATE PULSE WIDTH Adjustment

1. Input an NTSC color bar.
2. Connect the oscilloscope probes to TP301 (COMP-SYNC) and Q363 or IC305 Pin 1. (Be careful! IC305 Pin 1 is a high-impedance line.)
3. Put the unit into service mode.
4. Adjust [BGP WIDTH] so that the output waveform has the relationship shown in Fig. 11.

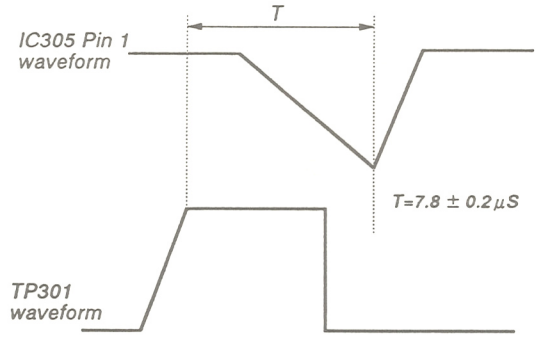

Fig. 11

7. VXO Adjustment

1. X'tal 358
   1) Input an NTSC color bar.
   2) Connect the frequency counter to IC305 Pin 21.
   3) Put the unit into service mode.
   4) Connect the circuit on the below to IC305 Pin 1.
   5) Adjust [CRYSTAL 358] so that the counter reading meets the standard below. (You can also just adjust for where the color flicker stops.)

   X'tal 358

   Standard level 3579545 ± 20Hz

   (For connecting to Pin 1, have the four diodes as close to Pin 1 as possible to reduce the length of the wires.)

2. X'tal 443
   1) Input a 443 NTSC color bar.
   2) Connect the frequency counter to IC305 Pin 21.
   3) Put the unit into service mode.
   4) Connect to IC305 Pin 1 in the same manner as in 1-4).
   5) Adjust Crystal 443 in the same manner as in 1-5).

   X'tal 443

   Standard level 4433619 ± 20Hz

8. NTSC COLOR DEMODULATION Adjustment

1. NTSC PHASE
   1) Input NTSC color bar signal.
   2) Connect the oscilloscope probe to TP306.
   3) Set to service mode.
   4) Adjust [NTSC PHASE] so that the output waveform burst section becomes a straight line. (Fig. 12)

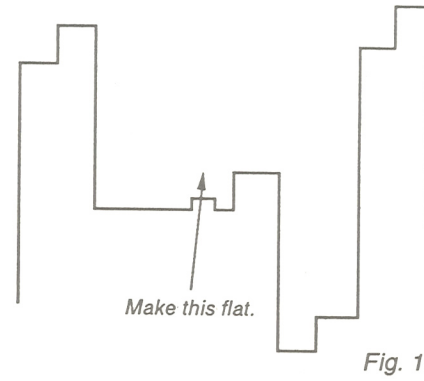

Fig. 12

2. NT358 B-Y PHASE

The phase adjustment must be carried out before the chroma adjustment.

   1) Input an NTSC color bar.
      (Input only the R-Y component. Have B-Y and Y off.)
   2) Connect the oscilloscope probe to TP305.
   3) Put the unit into service mode.
   4) Adjust [B-Y PHASE NTSC 358] so that the color components form a straight line.

3. NT358 CHROMA (NORMAL)
   1) Input an NTSC color bar.
   2) Connect the oscilloscope probe to IC404 Pin 30 or TP402.
   3) Put the unit into service mode.
   4) Using [NTSC CHROMA NORMAL], adjust so that the tops of the waveform line up as in the diagram below. (Fig. 13)

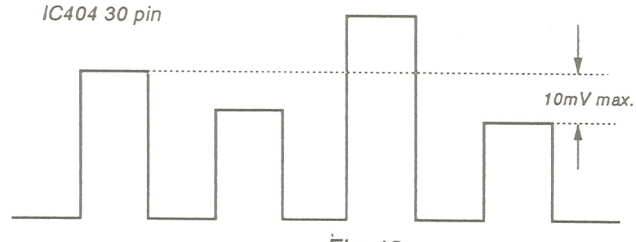

Fig. 13

Adjust so that the levels of the first peak and the fourth peak are the same.

4. NTSC 358 R-Y LEVEL

1) Input an NTSC358 color bar.
2) Connect the oscilloscope probe to IC404 Pin 41 or TP401.
3) Put the unit into service mode.
4) Using R-Y LEVEL NTSC 358, adjust so that the tops of the waveform line up as in the diagram below. (Fig. 14)

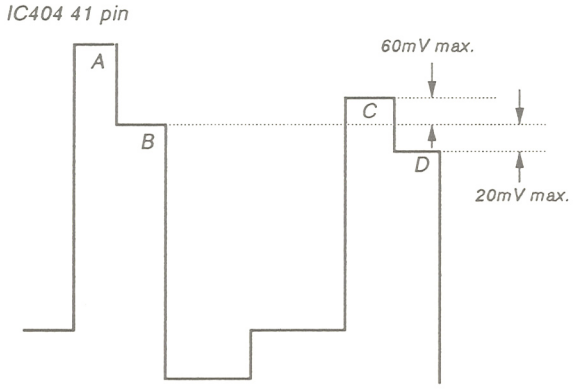

Fig. 14

Adjust so that B=D above (20 mV max.) Check that the difference between B and C is no greater than 60 mV.

5. PAL LINE CRAWLING

Note : Perform before PAL PHASE ADJUSTMENT.

1) Input a PAL color bar.
2) Connect the oscilloscope probe to TP402 (B-OUT)
3) Adjust the coil of CP302 so that the shaking of MAZENTA wave form become minimum.
   Do not touch the RV at this time.

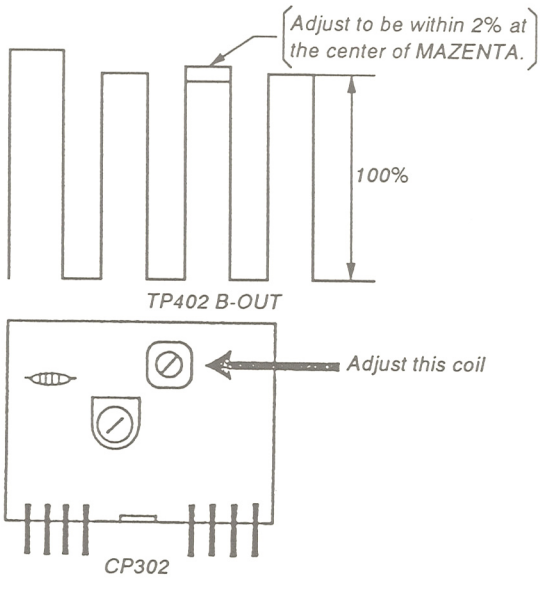

6. PAL PHASE (NORMAL)

1) Input a PAL SP color bar.
2) Connect the oscilloscope probe to TP306.
3) Put the unit into service mode.
4) Adjust PHASE PAL NOR so that the B-Y anti-PAL signal waveform is 0. (Fig. 15)

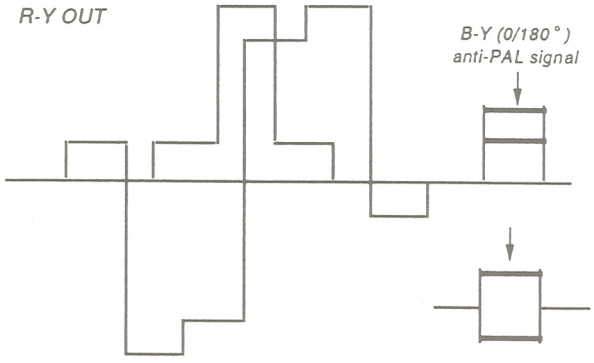

∗ Varies every H, although slightly, so adjust so that the average is 0.

Fig. 15

7. PAL B-Y PHASE

1) Input a PAL SP color bar.
2) Connect the oscilloscope probe to TP305.
3) Put the unit into service mode.
4) Adjust B-Y PHASE PAL so that the B-Y anti-PAL signal waveform is 0. (Fig. 16)

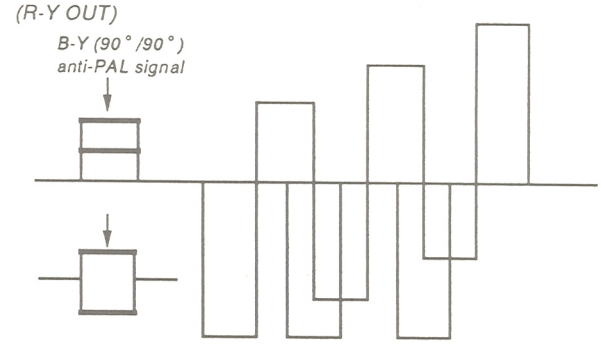

Fig. 16

∗ Varies every H, although slightly, so adjust so that the average is 0.

8. PAL CHROMA (NORMAL)

1) Input a PAL color bar.
2) Connect the oscilloscope probe to IC404 Pin 30 or TP402.
3) Put the unit into service mode.
4) Adjust CHROMA PAL NOR so that the tops of the waveform line up. (Fig. 17)

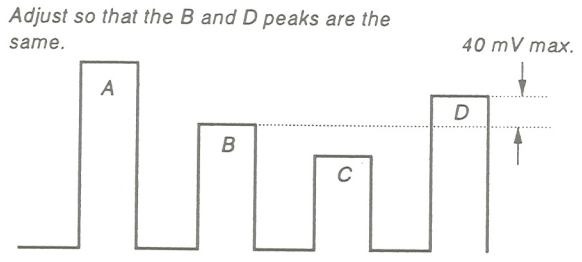

Fig. 17

9. PAL R-Y LEVEL

1) Input a PAL color bar.
2) Connect the oscilloscope probe to IC404 Pin 41 or TP401.
3) Put the unit into service mode.
4) Adjust R-Y LEVEL PAL so that the tops of the waveform line up as in the diagram below. (Fig. 18)

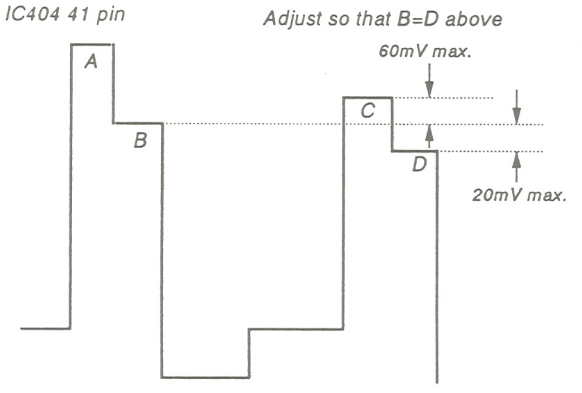

Fig. 18

9. Writing the adjustment result

1. Write the adjustment results into memory.

5-2. G BOARD ADJUSTMENT

1. Checking the output lines

Check that the output lines meet the standards below.

15V	16.0 ± 1.0V
5V(A)	5.0 ± 0.3V
+B	115 ± 0.1V
5V	5.0 ± 0.5V

SECTION 6
DIAGRAMS

6-1. BLOCK DIAGRAMS (1)

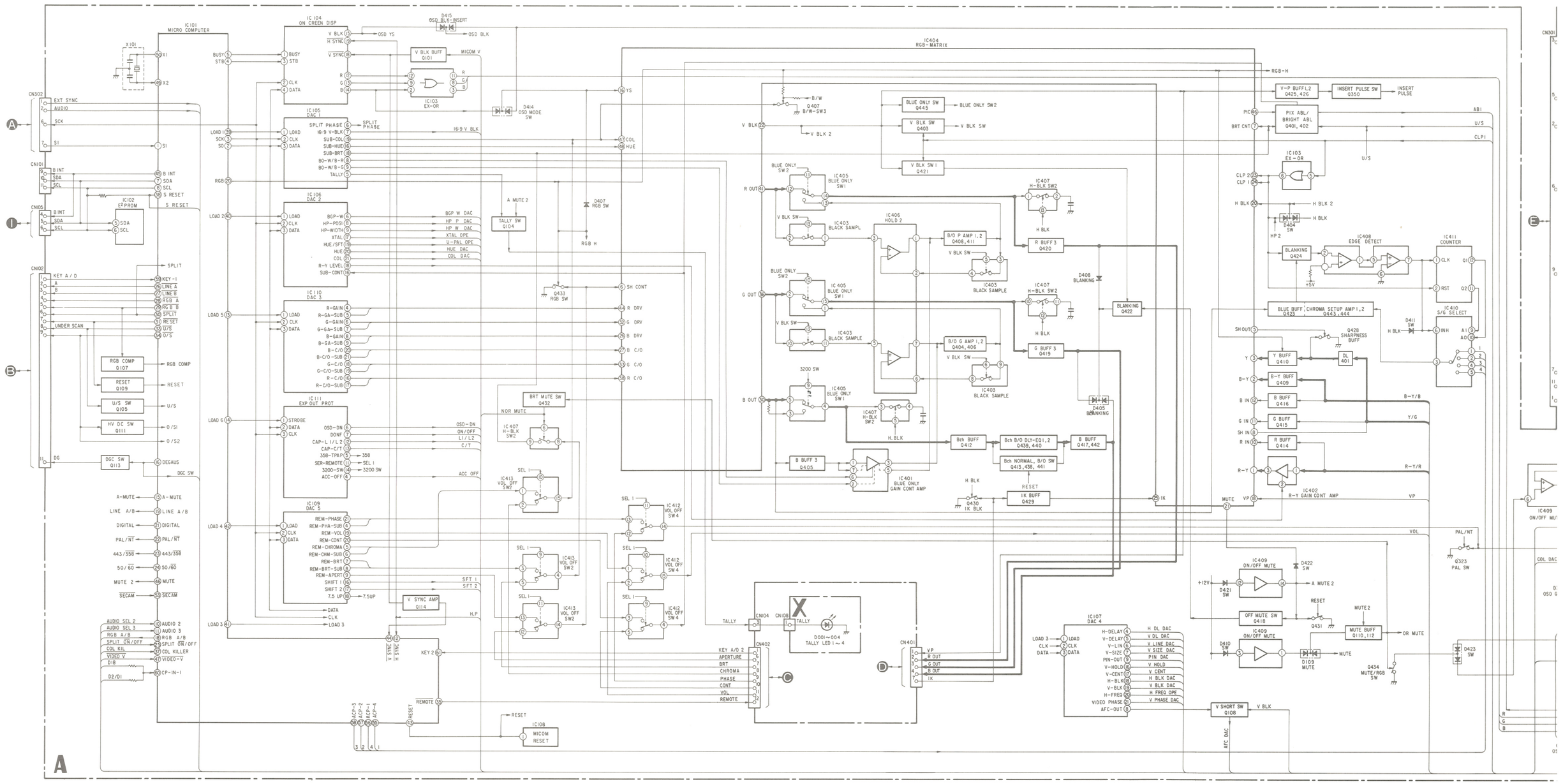

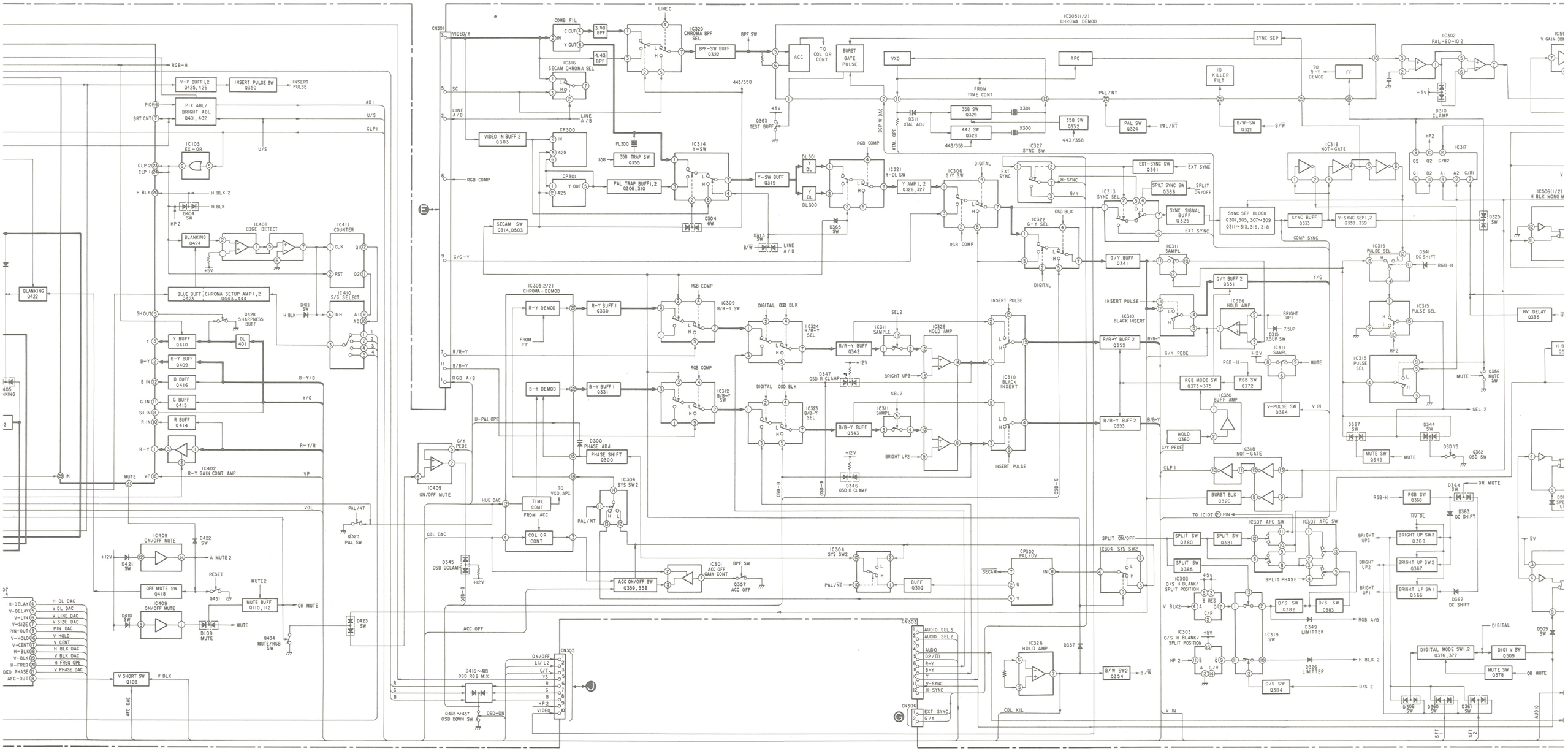
CN301
VIDEO/Y
SC
LINE A/B
RGB COMP
G/G-Y
R/R-Y
B/B-Y
RGB A/B
U-PAL OPE
COMB FIL
C OUT
Y OUT
3.58 BPF
4.43 BPF
IC316 SECAM CHROMA SEL
IC320 CHROMA BPF SEL
LINE C
BPF-SW BUFF Q322
BPF SW
443/358
ACC
TO COL OR CONT
BURST GATE PULSE
VXO
+5V
Q363 TEST BUFF
BRPF W DAC
XTAL OPE
D311 XTAL ADJ
FROM TIME CONT
358 SW Q329
443 SW Q328
X301
X300
358 SW Q332
443/358
APC
PAL/NT
PAL SW Q324
IC305(1/2) CHROMA DEMOD
SYNC SEP
IQ KILLER FILT
B/W-SW Q321
B/W
TO R-Y DEMOD
FF
IC302 PAL-60-IO2
D310 CLAMP
VIDEO IN BUFF 2 Q303
CP300
CP301
425
FL300
358 TRAP SW Q355
PAL TRAP BUFF1,2 Q306,310
IC314 Y-SW
Y-SW BUFF Q319
DL301
DL300
RGB COMP
IC321 Y-DL SW
Y AMP1,2 Q326,327
IC306 G/Y SW
DIGITAL
EXT SYNC
IC327 SYNC SW
EXT-SYNC SW Q361
EXT SYNC
H-SYNC
G/Y
SPLIT SYNC SW Q386
SPLIT
ON/OFF
IC313 SYNC SEL
SYNC SIGNAL BUFF Q325
SYNC SEP BLOCK Q301,305,307~309 Q311~313,315,318
SYNC BUFF Q333
V-SYNC SEP1,2 Q338,339
COMP SYNC
IC318 NOT-GATE
IC317
HP2
Q2 Q2 C/R2
Q1 B2 A1 A2 C/R1
D325 SW
SECAM SW Q314,0503
D313 SW
B/W
LINE A/B
D304 6W
D365 SW
IC322 G-Y SEL
OSD BLK
DIGITAL
RGB COMP
G/Y BUFF Q341
IC311 SAMPL
IC315 PULSE SEL
D341 DC SHIFT
RGB-H
G/Y BUFF 2 Q351
Y/G
INSERT PULSE
IC310 BLACK INSERT
IC326 HOLD AMP
BRIGHT UP1
7.5UP
D315 7.5UP SW
IC315 PULSE SEL
HV DELAY Q335
IC305(1/2) CHROMA-DEMOD
R-Y DEMOD
R-Y BUFF 1 Q330
IC309 R/R-Y SW
DIGITAL OSD BLK
IC324 R/R-Y SEL
SEL2
R/R-Y BUFF Q342
IC311 SAMPL
IC326 HOLD AMP
INSERT PULSE
R/R-Y BUFF 2 Q352
R/R-Y
G/Y PEDE
RGB MODE SW Q373~375
RGB SW Q372
IC311 SAMPL
MUTE
IC315 PULSE SEL
HP2
Q356 MUTE SW
B-Y DEMOD
B-Y BUFF 1 Q331
IC312 B/B-Y SW
IC323 B/B-Y SEL
B/B-Y BUFF Q343
BRIGHT UP3
BRIGHT UP2
+12V
Q347 OSD R CLAMP
D346 OSD B CLAMP
OSD-B
OSD-R
OSD-G
B/B-Y BUFF 2 Q353
B/B-Y
IC350 BUFF AMP
HOLD Q360
V-PULSE SW Q364
V IN
SEL 2
D327 SW
D344 SW
MUTE SW Q345
OSD YS
Q362 OSD SW
IC318 NOT-GATE
CLP 1
BURST BLK Q320
TO IC107 (21) PIN
OR MUTE
D364 SW
RGB SW Q368
D363 DC SHIFT
IC307 AFC SW
SPLIT SW Q380
SPLIT SW Q381
SPLIT SW Q385
SPLIT ON/OFF
IC304 SYS SW2
SPLIT PHASE
BRIGHT UP3
BRIGHT UP2
BRIGHT UP1
BRIGHT UP SW3 Q369
BRIGHT UP SW2 Q367
BRIGHT UP SW1 Q366
D362 DC SHIFT
IC303 O/S H BLANK/ SPLIT POSITION
B RES
V BLK2
C/R
O/S SW Q382
O/S SW Q383
RGB A/B
D349 LIMITER
IC319 SW
H BLK 2
D326 LIMITER
O/S SW Q384
O/S 2
DIGITAL
D509 SW
DIGITAL MODE SW1,2 Q376,377
DIGI V SW Q509
MUTE SW Q378
OR MUTE
D306 SW
Q360 SW
D361 SW
AUDIO
SET
SET 2
IC304 SYS SW2
CP302 PAL/DV
SECAM
IN
U
V
BUFF Q302
D357
B/W SW2 Q354
B/W
COL KIL
CN303
AUDIO SEL 3
AUDIO SEL 2
AUDIO
D2/D1
R-Y
B-Y
Y
V-SYNC
H-SYNC
CN306
EXT SYNC
G/Y
CN305
ON/OFF
LI/L2
C/T
YS
R
G
B
HP 2
VIDEO
D416~418 OSD RGB MIX
Q435~437 OSD DOWN SW
OSD-DN
IC409 ON/OFF MUTE
D422 SW
D421 SW
A MUTE 2
OFF MUTE SW Q418
RESET
Q431
MUTE2
MUTE BUFF Q110,112
OR MUTE
D410 SW
D109 MUTE
Q434 MUTE/RGB SW
D423 SW
ACC OFF
ACC ON/OFF SW Q359,358
IC301 ACC OFF GAIN CONT
BPF SW
Q357 ACC OFF
D345 OSD GCLAMP
+12V
OSD-G
HUE DAC
TIME COMT
FROM ACC
TO VXO,APC
COL OR CONT
COL DAC
PAL/NT
Q323 PAL SW
IC304 SYS SW2
D300 PHASE ADJ
PHASE SHIFT Q300
RGB-H
V-P BUFF1,2 Q425,426
INSERT PULSE SW Q350
INSERT PULSE
PIC
PIX ABL/ BRIGHT ABL Q401,402
ABI
U/S
CLPI
BRT CNT
IC103 EX-OR
CLP 2
CLP 1
H BLK
H BLK 2
D404 SW
IC408 EDGE DETECT
IC411 COUNTER
BLANKING Q424
CLK
RST
Q1
Q2
BLANKING Q422
BLUE BUFF, CHROMA SETUP AMP1,2 Q423, Q443,444
IC410 S/G SELECT
INH
A1
A0
D411 SW
SH OUT
Q428 SHARPNESS BUFF
Y BUFF Q410
DL 401
B-Y BUFF Q409
B BUFF Q416
G BUFF Q415
R BUFF Q414
B-Y/B
Y/G
R-Y/R
IC402 R-Y GAIN CONT AMP
MUTE
VP
VOL
H-DELAY
V-DELAY
V-LIN
V-SIZE
PIN-OUT
V-HOLD
V-CENT
H-BLK
V-BLK
H-FREQ
VIDEO PHASE
AFC-OUT
H DL DAC
V DL DAC
V LINE DAC
V SIZE DAC
PIN DAC
V HOLD
V CENT
H BLK DAC
V BLK DAC
H FREQ OPE
V PHASE DAC
V SHORT SW Q108
V BLK
AFC DAC

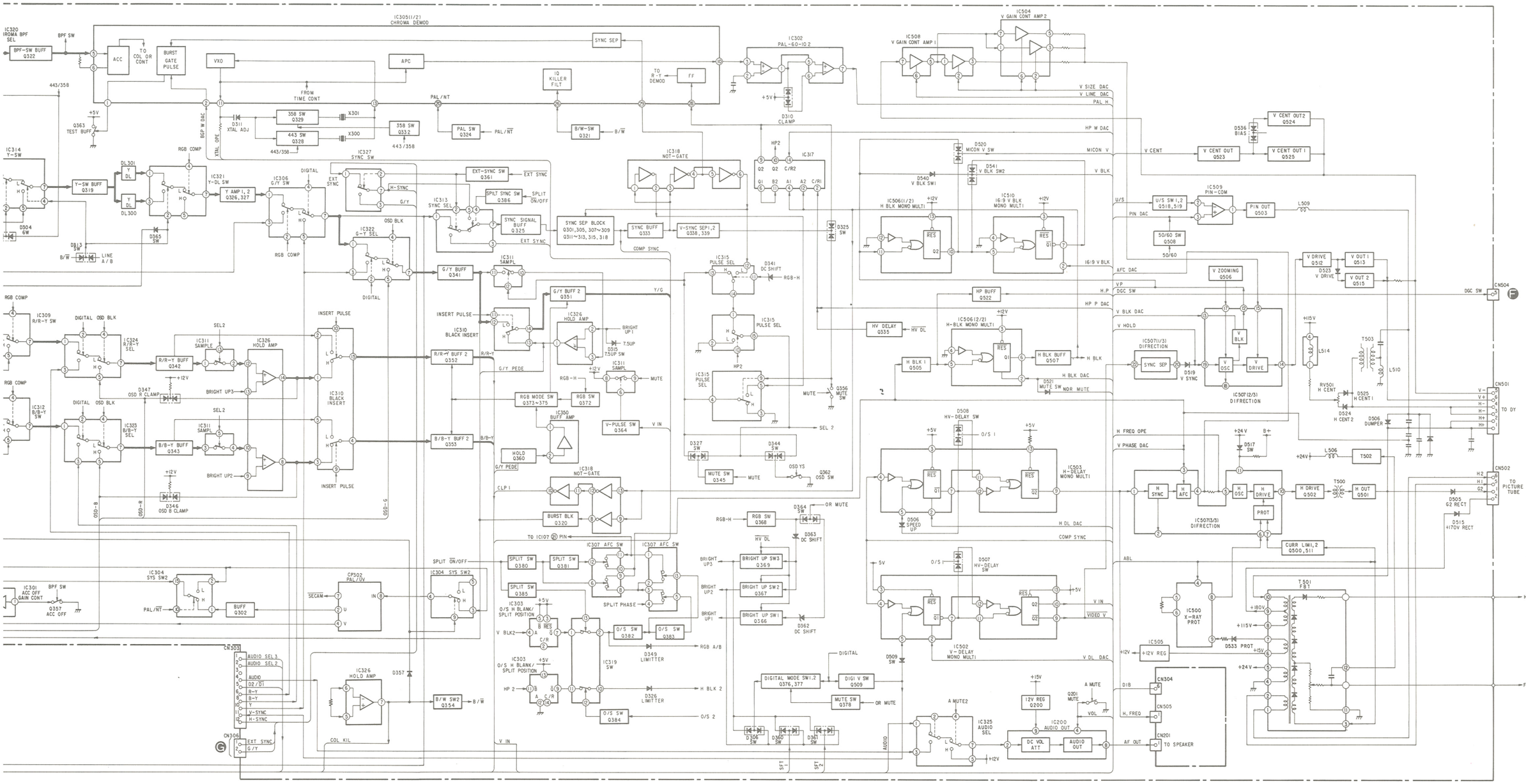
IC320 IROMA BPF SEL
BPF SW
BPF-SW BUFF Q322
ACC
TO COL OR CONT
BURST GATE PULSE
VXO
IC305(1/2) CHROMA DEMOD
SYNC SEP
APC
IQ KILLER FILT
TO R-Y DEMOD
FF
IC302 PAL-60-IQ 2
IC508 V GAIN CONT AMP 1
IC504 V GAIN CONT AMP 2
443/358
FROM TIME CONT
PAL/NT
+5V
D310 CLAMP
V SIZE DAC
V LINE DAC
PAL H
Q363 TEST BUFF
BPF W DAC
XTAL OFF
D311 XTAL ADJ
358 SW Q329
443 SW Q328
X301
X300
358 SW Q332
443/358
PAL SW Q324
PAL/NT
B/W-SW Q321
B/W
HP W DAC
D536 BIAS
V CENT OUT2 Q524
V CENT
V CENT OUT Q523
V CENT OUT1 Q525
IC314 Y-SW
RGB COMP
DL301 Y DL
DL300 Y DL
IC321 Y-DL SW
Y AMP 1,2 Q326,327
IC306 G/Y SW
DIGITAL
EXT SYNC
IC327 SYNC SW
H-SYNC
G/Y
IC313 SYNC SEL
EXT-SYNC SW Q361
EXT SYNC
SPLIT SYNC SW Q386
SPLIT ON/OFF
SYNC SIGNAL BUFF Q325
EXT SYNC
IC318 NOT-GATE
HP2
IC317
Q2 Q2 C/R2
Q1 B2 A1 A2 C/R1
D520 MICON V SW
D541 V BLK SW2
D540 V BLK SW1
MICON V
V BLK
IC506(1/2) H BLK MONO MULTI
IC510 16:9 V BLK MONO MULTI
+12V
RES
Q1
Q2
U/S
U/S SW 1,2 Q518,519
IC509 PIN-COM
PIN OUT Q503
L509
PIN DAC
50/60 SW Q508
50/60
D304 6W
D313 SW
B/W
LINE A/B
D365 SW
RGB COMP
OSD BLK
IC322 G-Y SEL
DIGITAL
SYNC SEP BLOCK Q301,305, 307~309 Q311~313, 315, 318
SYNC BUFF Q333
V-SYNC SEP1,2 Q338, 339
COMP SYNC
D325 SW
16:9 V BLK
AFC DAC
V ZOOMING Q506
V DRIVE Q512
V OUT1 Q513
V OUT 2 Q515
V DRIVE Q523
VP
H.P
DGC SW
CN504
G/Y BUFF Q341
IC311 SAMPL
IC315 PULSE SEL
D341 DC SHIFT
RGB-H
G/Y BUFF 2 Q351
Y/G
HP BUFF Q522
HP P DAC
V BLK DAC
V HOLD
IC309 R/R-Y SW
DIGITAL OSD BLK
IC324 R/R-Y SEL
SEL2
R/R-Y BUFF Q342
INSERT PULSE
IC310 BLACK INSERT
IC326 HOLD AMP
INSERT PULSE
R/R-Y BUFF 2 Q352
R/R-Y
G/Y PEDE
BRIGHT UP1
D315 7.5UP SW
7.5UP
HV DELAY Q335
HV DL
IC506(2/2) H-BLK MONO MULTI
H BLK 1 Q505
H BLK BUFF Q507
H BLK
IC507(1/3) DIFRECTION
SYNC SEP
D519 V SYNC
V BLK
V OSC
V DRIVE
IC507(2/3) DIFRECTION
+H15V
L514
T503
L510
RV501 H CENT
D525 H CENT1
D524 H CENT2
D521 MUTE SW
NOR MUTE
H BLK DAC
IC312 B/B-Y SW
IC323 B/B-Y SEL
IC311 SAMPL
B/B-Y BUFF Q343
B/B-Y BUFF 2 Q353
B/B-Y
BRIGHT UP3
BRIGHT UP2
D347 OSD R CLAMP
D346 OSD B CLAMP
+12V
IC310 BLACK INSERT
INSERT PULSE
OSD-B
OSD-R
OSD-G
RGB MODE SW Q373~375
RGB SW Q372
IC350 BUFF AMP
HOLD Q360
V-PULSE SW Q364
V IN
MUTE
Q356 MUTE SW
SEL 2
D327 SW
D344 SW
MUTE SW Q345
OSD YS
Q362 OSD SW
G/Y PEDE
CLP 1
IC318 NOT-GATE
BURST BLK Q320
TO IC101 (27) PIN
D508 HV-DELAY SW
O/S 1
IC503 H-DELAY MONO MULTI
+5V
+24V
B+
D517 SW
L506
T502
H FREQ OPE
V PHASE DAC
H SYNC
H AFC
H OSC
H DRIVE
PROT
IC507(3/3) DIFRECTION
H DRIVE Q502
T500
H OUT Q501
CN502
H2
H1
G2
TO PICTURE TUBE
D505 G2 RECT
D515 +170V RECT
H DL DAC
COMP SYNC
CURR LIM1,2 Q500,511
ABL
IC304 SYS SW2
IC301 ACC OFF GAIN CONT
BPF SW
Q357 ACC OFF
PAL/NT
BUFF Q302
CP302 PAL/DV
SECAM
IN
U
V
IC304 SYS SW2
SPLIT ON/OFF
SPLIT SW Q380
SPLIT SW Q381
SPLIT SW Q385
IC307 AFC SW
IC307 AFC SW
SPLIT PHASE
IC303 O/S H BLANK/ SPLIT POSITION
V BLK2
B RES
A C/R
O/S SW Q382
O/S SW Q383
RGB A/B
D349 LIMITTER
IC319 SW
IC303 O/S H BLANK/ SPLIT POSITION
HP 2
B A_C/R
D326 LIMITTER
H BLK 2
O/S SW Q384
O/S 2
RGB-H
RGB SW Q368
D364 SW
OR MUTE
D363 DC SHIFT
HV DL
BRIGHT UP3
BRIGHT UP SW3 Q369
BRIGHT UP2
BRIGHT UP SW2 Q367
BRIGHT UP1
BRIGHT UP SW1 Q366
D362 DC SHIFT
DIGITAL
DIGITAL MODE SW1,2 Q376,377
DIGI V SW Q509
MUTE SW Q378
OR MUTE
D306 SW
D360 SW
D361 SW
D509 SW
IC502 V-DELAY MONO MULTI
D507 HV-DELAY SW
O/S
5V
V IN
VIDEO V
V DL DAC
IC500 Y-BAY PROT
+180V
+115V
+15V
D533 PROT
T501 FBT
HV
FOCUS
IC505 +12V REG
+12V
+24V
CN304
CN505
CN201
TO SPEAKER
DIB
H. FREQ
AF OUT
A MUTE2
IC325 AUDIO SEL
AUDIO
+12V REG Q200
+15V
Q201 MUTE
A MUTE
VOL
IC200 AUDIO OUT
DC VOL ATT
AUDIO OUT
CN303
AUDIO SEL 3
AUDIO SEL 2
AUDIO D2/D1
R-Y
B-Y
Y
V-SYNC
H-SYNC
CN306
EXT SYNC
G/Y
IC326 HOLD AMP
D357
COL KIL
B/W SW2 Q354
B/W
SFT1
SFT2
CN501
V-
V+
H-
H-
H+
H+
TO DY

BLOCK DIAGRAMS (2)

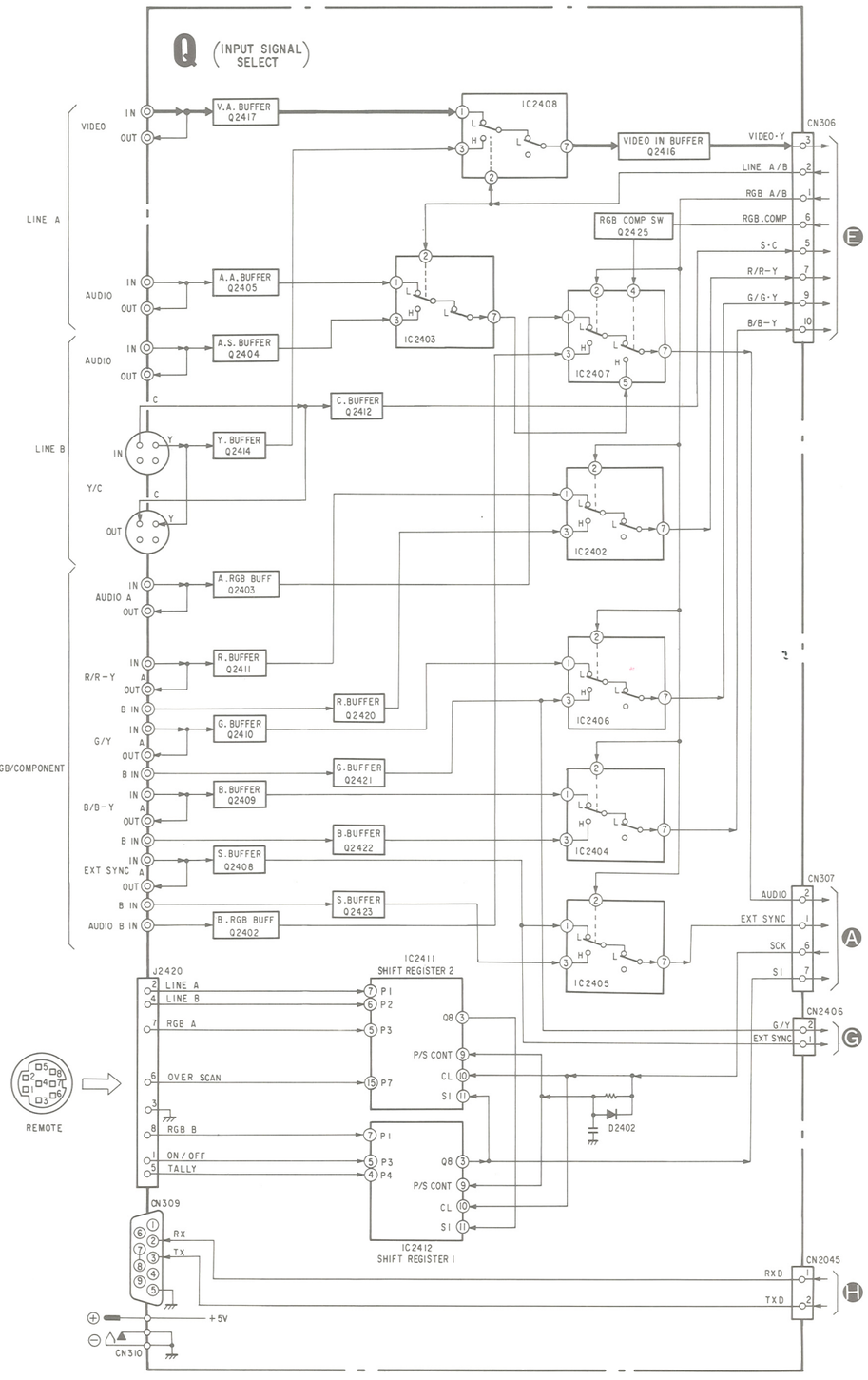

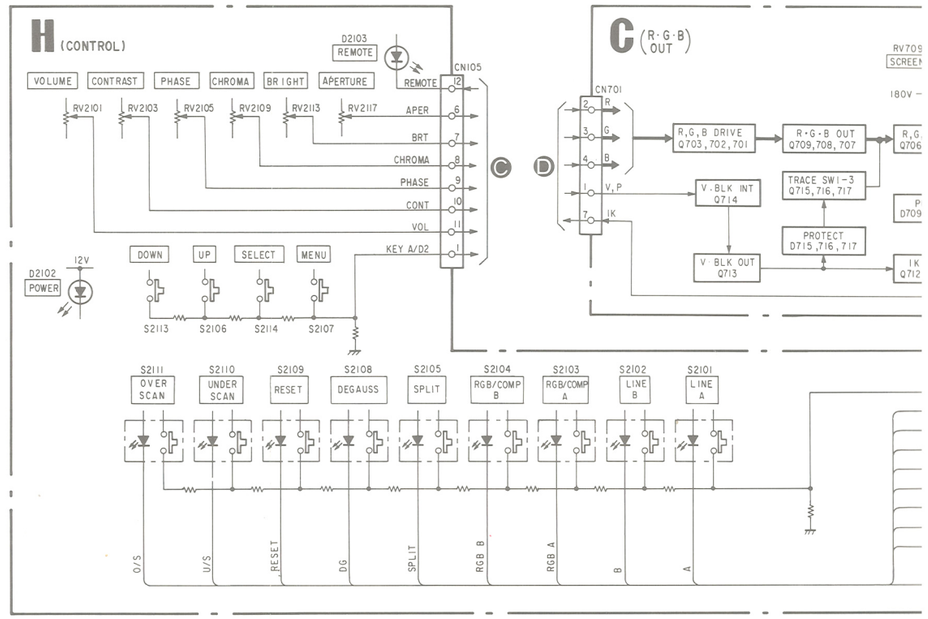

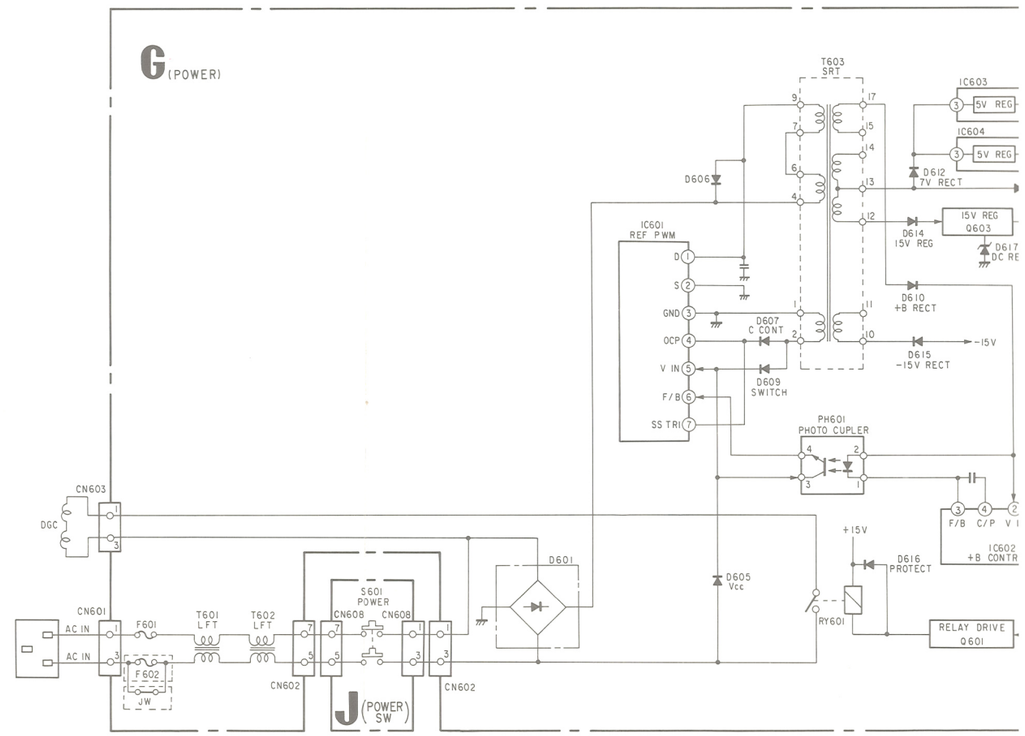

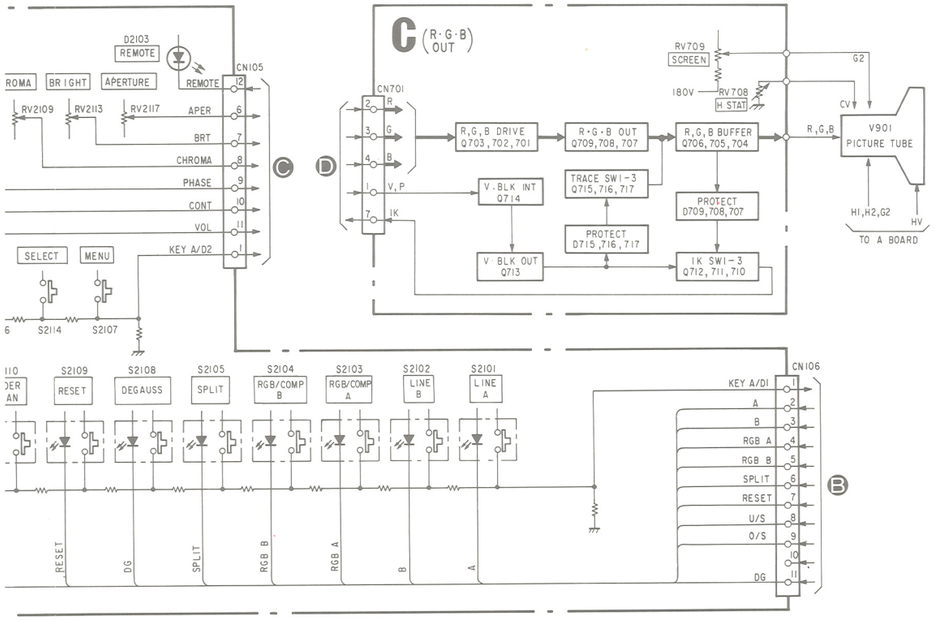
D2103
REMOTE
CN105
ROMA
BRIGHT
APERTURE
REMOTE
RV2109
RV2113
RV2117
APER
BRT
CHROMA
PHASE
CONT
VOL
KEY A/D2
SELECT
MENU
S2114
S2107
C (R·G·B OUT)
CN701
R
G
B
V.P
IK
R,G,B DRIVE Q703,702,701
R·G·B OUT Q709,708,707
R,G,B BUFFER Q706,705,704
V.BLK INT Q714
TRACE SW1-3 Q715,716,717
PROTECT D709,708,707
PROTECT D715,716,717
V.BLK OUT Q713
IK SW1-3 Q712,711,710
RV709
SCREEN
180V
RV708
H.STAT
G2
CV
V901
PICTURE TUBE
R,G,B
H1,H2,G2
HV
TO A BOARD
S2110
S2109
RESET
S2108
DEGAUSS
S2105
SPLIT
S2104
RGB/COMP B
S2103
RGB/COMP A
S2102
LINE B
S2101
LINE A
CN106
KEY A/D1
A
B
RGB A
RGB B
SPLIT
RESET
U/S
O/S
DG
RESET
DG
SPLIT
RGB B
RGB A
B
A

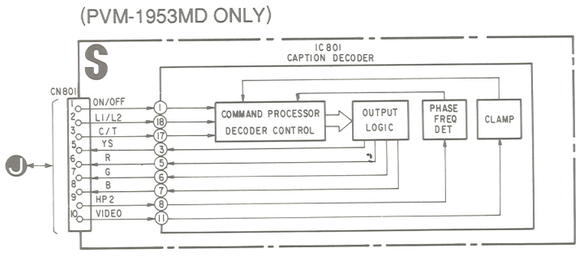
(PVM-1953MD ONLY)
S
IC801
CAPTION DECODER
CN801
ON/OFF
L1/L2
C/T
YS
R
G
B
H P2
VIDEO
COMMAND PROCESSOR DECODER CONTROL
OUTPUT LOGIC
PHASE FREQ DET
CLAMP
J

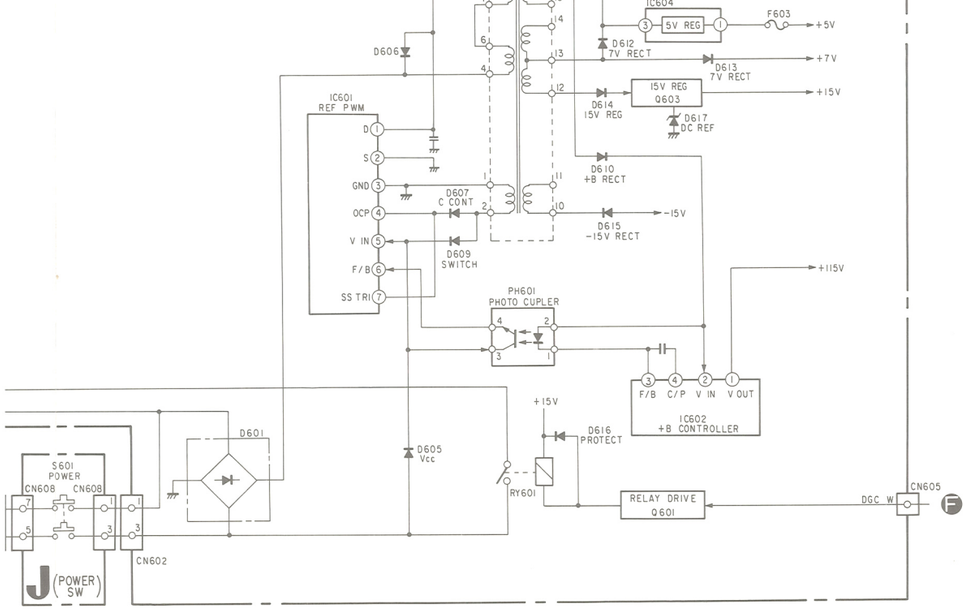
T603
SRT
IC603
5V REG
+5VA
IC604
5V REG
F603
+5V
D606
D612
7V RECT
+7V
D613
7V RECT
+15V
15V REG Q603
D614
15V REG
D617
DC REF
IC601
REF PWM
D
S
GND
OCP
V IN
F/B
SS TRI
D607
C CONT
D609
SWITCH
D610
+B RECT
-15V
D615
-15V RECT
+115V
PH601
PHOTO CUPLER
IC602
+B CONTROLLER
F/B
C/P
V IN
V OUT
D601
D605
Vcc
+15V
D616
PROTECT
RY601
RELAY DRIVE Q601
DGC W
CN605
S601
POWER
CN608
CN608
CN602
J (POWER SW)

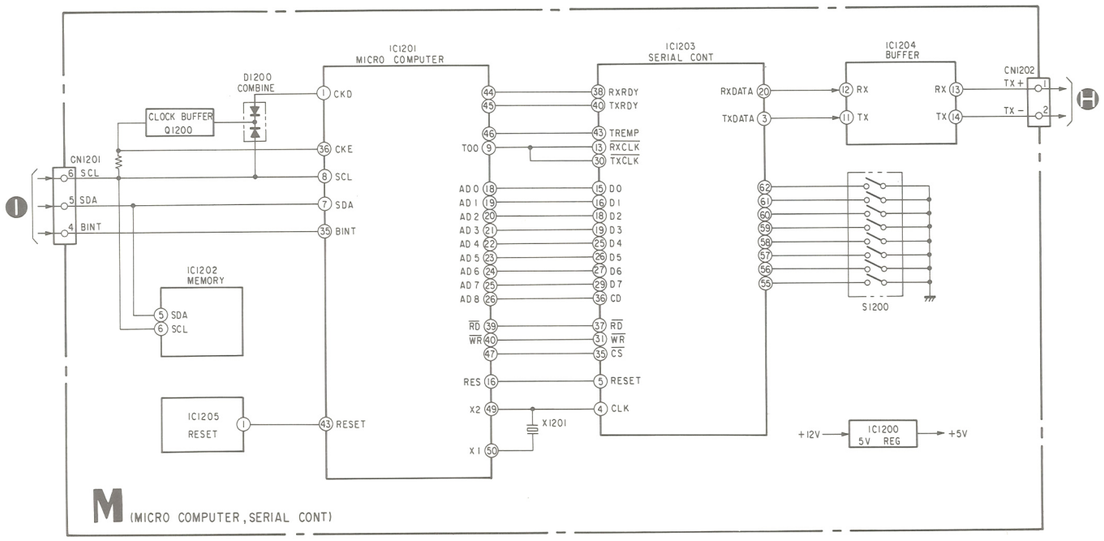
IC1201
MICRO COMPUTER
D1200
COMBINE
CLOCK BUFFER Q1200
CN1201
SCL
SDA
BINT
CKD
CKE
SCL
SDA
BINT
IC1202
MEMORY
IC1205
RESET
RESET
TOO
AD0
AD1
AD2
AD3
AD4
AD5
AD6
AD7
AD8
RD
WR
RES
X2
X1
X1201
IC1203
SERIAL CONT
RXRDY
TXRDY
TREMP
RXCLK
TXCLK
D0
D1
D2
D3
D4
D5
D6
D7
CD
RD
WR
CS
RESET
CLK
IC1204
BUFFER
RXDATA
TXDATA
RX
TX
CN1202
TX+
TX-
S1200
+12V
IC1200
5V REG
+5V
I
H
M (MICRO COMPUTER, SERIAL CONT)

/M-1953MD ONLY)

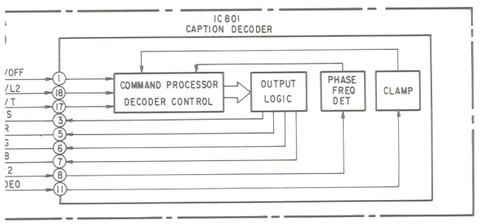

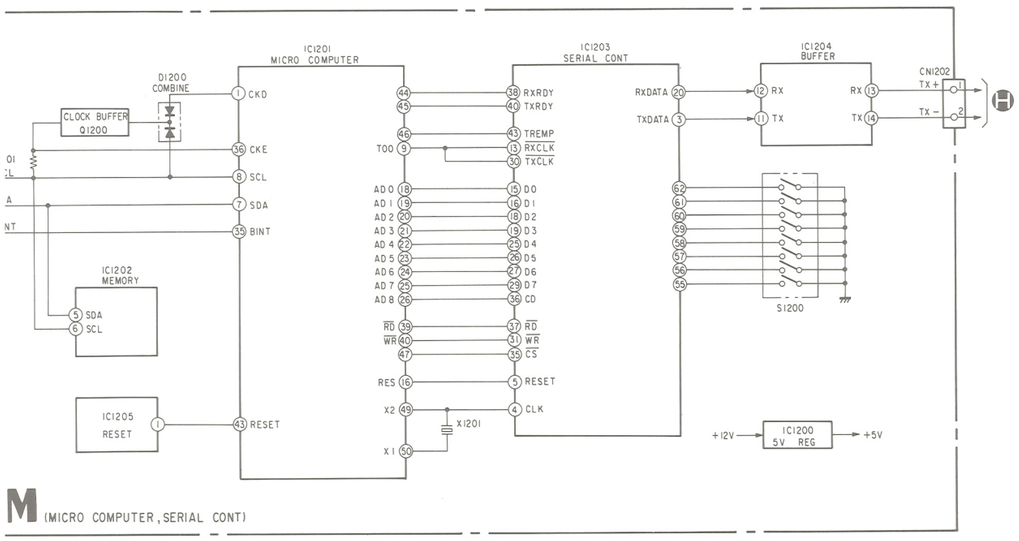

M (MICRO COMPUTER, SERIAL CONT)

6-2. FRAME SCHEMATIC DIAGRAMS

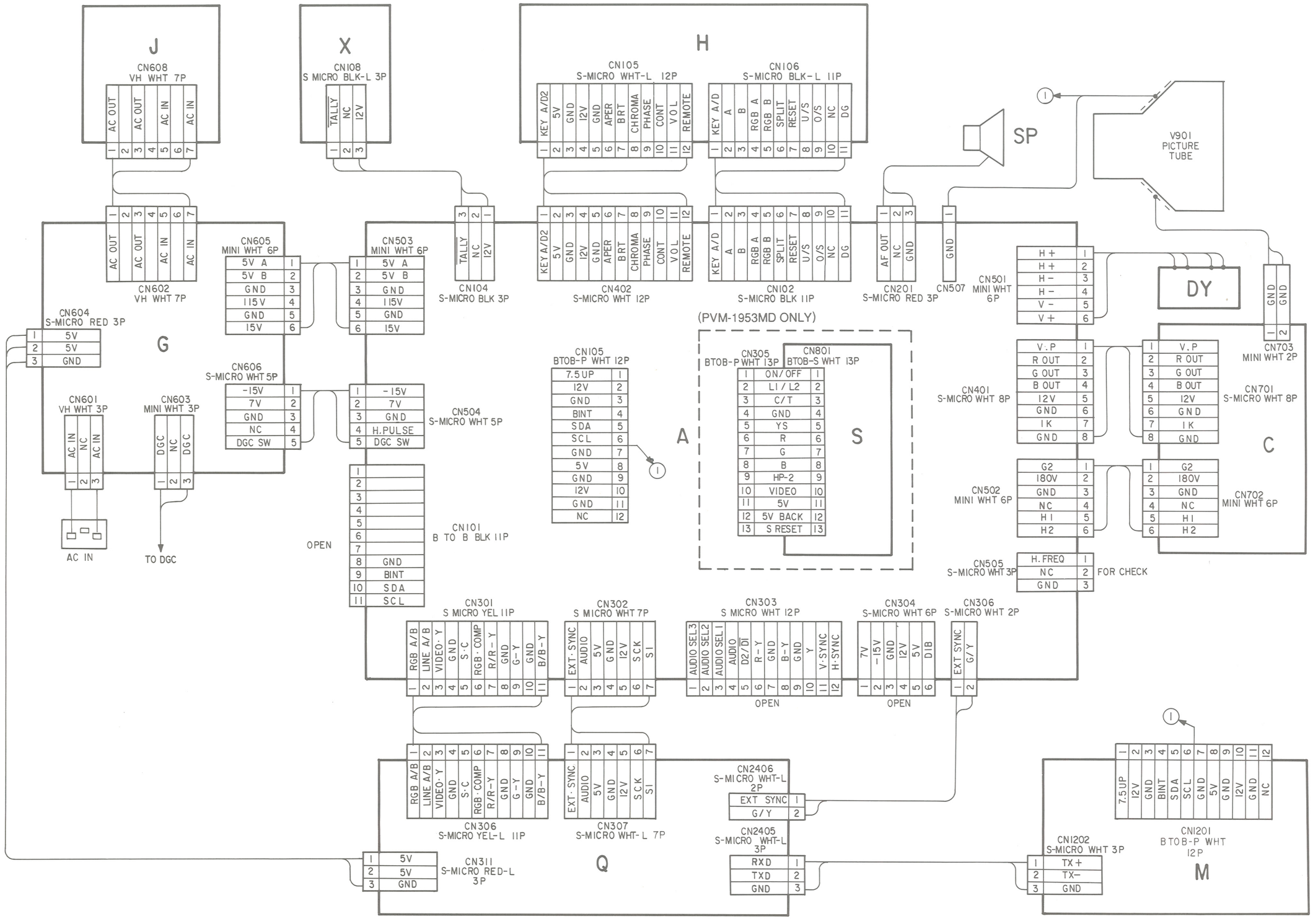

6-3. CIRCUIT BOARDS LOCATION

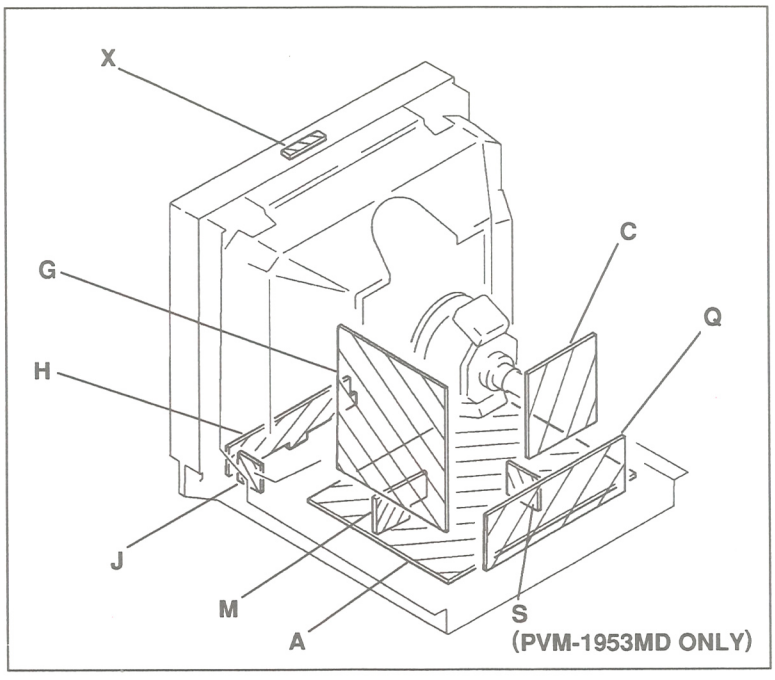

6-4. PRINTED WIRING BOARDS AND SCHEMATIC DIAGRAMS

Note:

- All capacitors are in µF unless otherwise noted. pF: µµF 50WV or less are not indicated except for electrolytics.
- All electrolytics are in 50V unless otherwise specified.
- All resistors are in ohms, 1/4W in resistance, 1/10W in chip resistance. kΩ=1000Ω, MΩ=1000kΩ
- : nonflammable resistor.
- : fusible resistor.
- : internal component.
- : panel designation and adjustment for repair.
- All variable and adjustable resistors have characteristic curve B, unless otherwise noted.
- The components identified by ⊠ in this basic schematic diagram have been carefully factory-selected for each set in order to satisfy regulations regarding X-ray radiation.
  Should replacement be required, replace only with the value originally used.
- When replacing components identified by ◪ , make the necessary adjustments indicated. If results do not meet the specified value, change the component identified by ⊠ and repeat the adjustment until the specified value is achieved. (Refer to R1535, R1536 adjust on Page 36 .)
- When replacing the part in below table, be sure to perform the related adjustment.

Part replaced (◪)	Adjustment (⊠)
IC500, IC507, Q500, Q501, D501, D533, C506, C512, C513, C523, C549, C592, R506, R508, R515, R516, R517, R518, R519, R551, R1535, R1536, R1537, T501 ·····(A BOARD) IC602, C603·····(G BOARD)	R1535, R1536 (HOLD-DOWN)

- All voltage are in V.
- Voltage are dc with respect to ground unless otherwise noted.
- Readings are taken with a color-bar signal input.
- Voltage variations may be noted due to normal production tolerances.
- : B + bus.
- : B − bus.
- : SIgnal path.
- No mark : with PAL color-bar signal is received or common voltage.
- For the respective voltage ratings in NTSC 3.58, S-VIDEO and ANALOG RGB modes, see the table.

Reference information

RESISTOR	: RN	METAL FILM
	: RC	SOLID
	: FPRD	NONFLAMMABLE CARBON
	: FUSE	NONFLAMMABLE FUSIBLE
	: RW	NONFLAMMABLE WIREWOUND
	: RS	NONFLAMMABLE METAL OXIDE
	: RB	NONFLAMMABLE CEMENT
COIL	: LF-8L	MICRO INDUCTOR
CAPACITOR	: TA	TANTALUM
	: PS	STYROL
	: PP	POLYPROPYLENE
	: PT	MYLAR
	: MPS	METALIZED POLYESTER
	: MPP	METALIZED POLYPROPYLENE
	: ALB	BIPOLAR
	: ALT	HIGH TEMPERATURE
	: ALR	HIGH RIPPLE

Note: The components identified by shading and mark ⚠ are critical for safety. Replace only with part number specified.

Note: Les composants identifiés par une trame et par une marque ⚠ sont d'une importance critique pour la sécurité. Ne les remplacer que par des pièces de numéro spécifié.

A BOARD IC101 μPD78013YCW

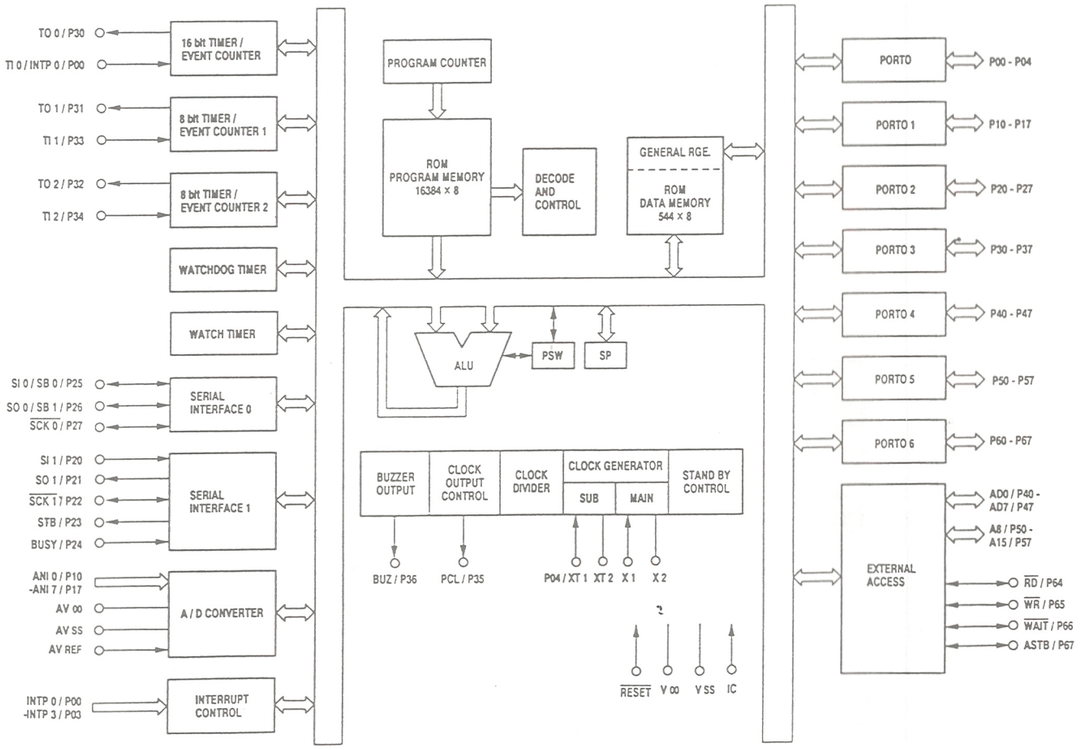

A BOARD IC305 M51279FP

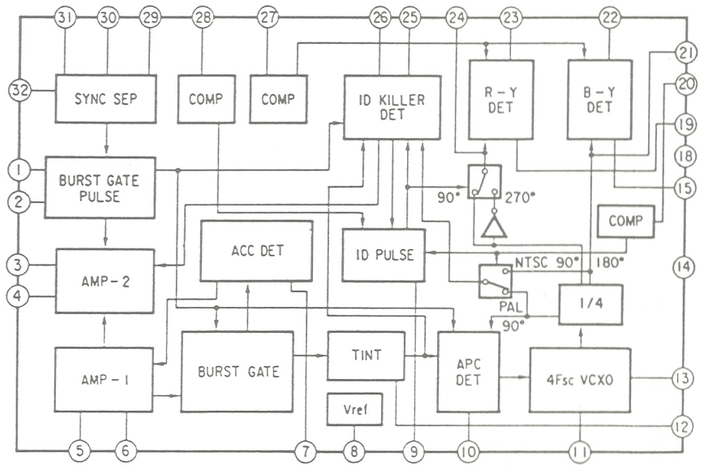

A BOARD IC404 CXA1478

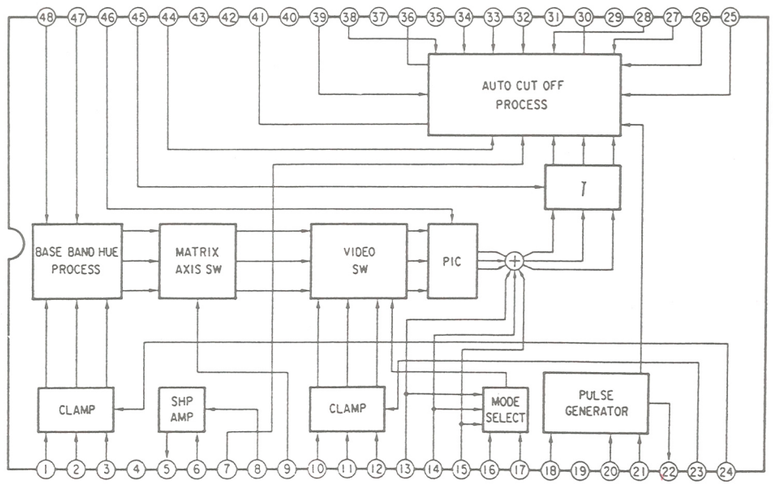

A BOARD IC200 AN5265

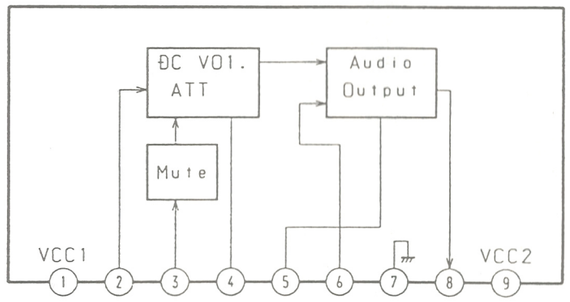

A BOARD (COMPONENT SIDE)

IC

IC101	B-2
IC102	B-1
IC103	C-1
IC104	B-2
IC105	B-3
IC106	C-3
IC107	C-2
IC109	C-3
IC110	C-3
IC111	B-2
IC200	A-5
IC301	G-2
IC302	G-3
IC303	E-2
IC304	G-1
IC305	G-2
IC306	F-3
IC307	E-1
IC309	F-3
IC310	D-3
IC311	E-3
IC312	E-3
IC313	F-3
IC314	G-4
IC315	D-2
IC316	G-5
IC317	D-1
IC318	D-2
IC319	F-2
IC320	F-5
IC321	F-5
IC322	E-6
IC323	E-6
IC324	E-5
IC325	E-4
IC326	E-3
IC327	E-1
IC350	D-2
IC401	B-4
IC402	D-4
IC403	B-5
IC404	D-5
IC405	C-5
IC406	B-5
IC407	C-5
IC408	C-6
IC409	C-6
IC410	B-5
IC411	B-5
IC412	B-4
IC413	C-4
IC500	G-9
IC502	G-6
IC503	G-6
IC504	C-7
IC505	E-6
IC506	E-6
IC507	D-7
IC508	C-7
IC509	C-8
IC510	E-3

TRANSISTOR

Q102	C-2
Q103	C-2
Q104	B-2
Q105	A-3
Q107	A-3
Q108	C-2
Q109	B-3
Q110	A-1
Q112	D-6
Q200	A-6
Q300	G-3
Q308	G-3
Q311	G-3
Q314	F-4
Q316	G-5
Q320	E-3
Q324	G-1
Q335	D-1
Q341	E-3
Q342	E-3
Q343	E-4
Q353	D-3
Q354	E-3
Q355	F-5
Q356	D-2
Q357	G-2
Q358	G-1
Q359	G-1
Q360	D-2
Q362	D-3
Q366	E-3
Q372	D-3
Q373	D-3
Q374	C-3
Q376	E-3
Q377	E-3
Q378	F-3
Q380	E-2
Q381	E-2
Q382	E-2
Q383	E-2
Q384	E-1
Q385	E-2
Q386	E-2
Q404	B-5
Q406	B-5
Q408	B-5
Q410	D-4
Q411	B-5
Q412	C-5
Q413	C-5
Q414	D-5
Q415	D-5
Q416	D-5
Q425	D-5
Q426	D-6
Q429	C-6
Q430	D-6
Q432	C-5
Q433	C-4
Q435	D-4
Q436	D-4
Q437	D-4
Q438	C-5
Q440	C-4
Q441	C-4
Q442	C-4
Q445	C-5
Q501	D-9
Q502	D-8
Q503	B-7
Q512	A-10
Q513	B-9
Q515	B-9
Q518	B-7
Q520	B-7
Q523	B-6
Q524	A-6
Q525	A-6
Q527	B-8

DIODE

D100	D-5
D104	B-1
D105	B-1
D106	B-4
D108	E-5
D109	A-1
D113	B-5
D114	F-2
D300	G-2
D305	G-3
D306	E-3
D308	F-2
D313	G-5
D314	C-1
D324	G-5
D326	F-1
D327	D-3
D332	E-3
D335	G-5
D338	E-3
D339	F-1
D341	C-3
D360	C-3
D361	C-3
D362	E-3
D365	G-4
D381	D-2
D406	C-1
D414	D-4
D415	D-5
D416	D-4
D417	D-4
D418	D-4
D423	C-6
D424	B-5
D502	E-9
D504	D-9
D505	E-10
D506	D-9
D510	F-6
D512	D-9
D514	E-7
D515	F-10
D520	E-6
D521	C-6
D522	D-6
D524	C-9
D525	C-9
D527	B-8
D528	A-10
D529	A-9
D530	A-10
D533	G-10
D535	B-6
D537	A-7
D538	D-6
D539	B-7
D540	E-6
D541	F-3

VARIABLE RESISTOR

RV501	B-9

– A BOARD – ＜Component Side＞

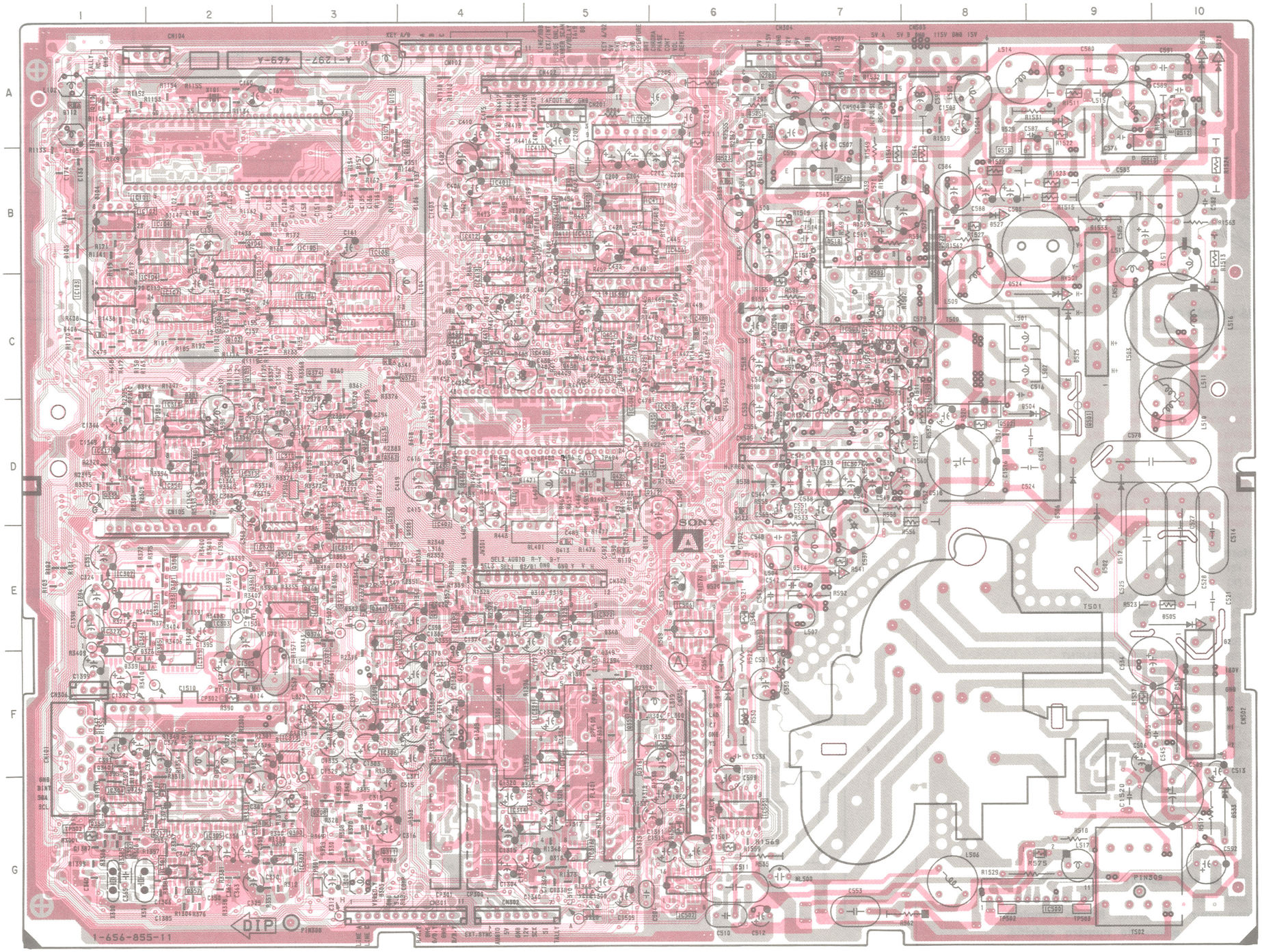

A [MICON, RGB-MATRIX, DAC, ON SCREEN DISPLAY, ON/OFF MUTE, VOL OFF SW, BLACK-SAMPLING, RGB SW] [CHROMA DEMOD, SECAM CHROMA SELECT, SYSTEM SW, SYNC SELECT, B/B-Y SW, R/R-Y SW, G/Y SW, AUDIO SELECT, SECAM DECORDER, HOLD AMP] [H/V OUT, DEFLECTION SYSTEM, AUDIO OUT]

＜Conductor Side＞

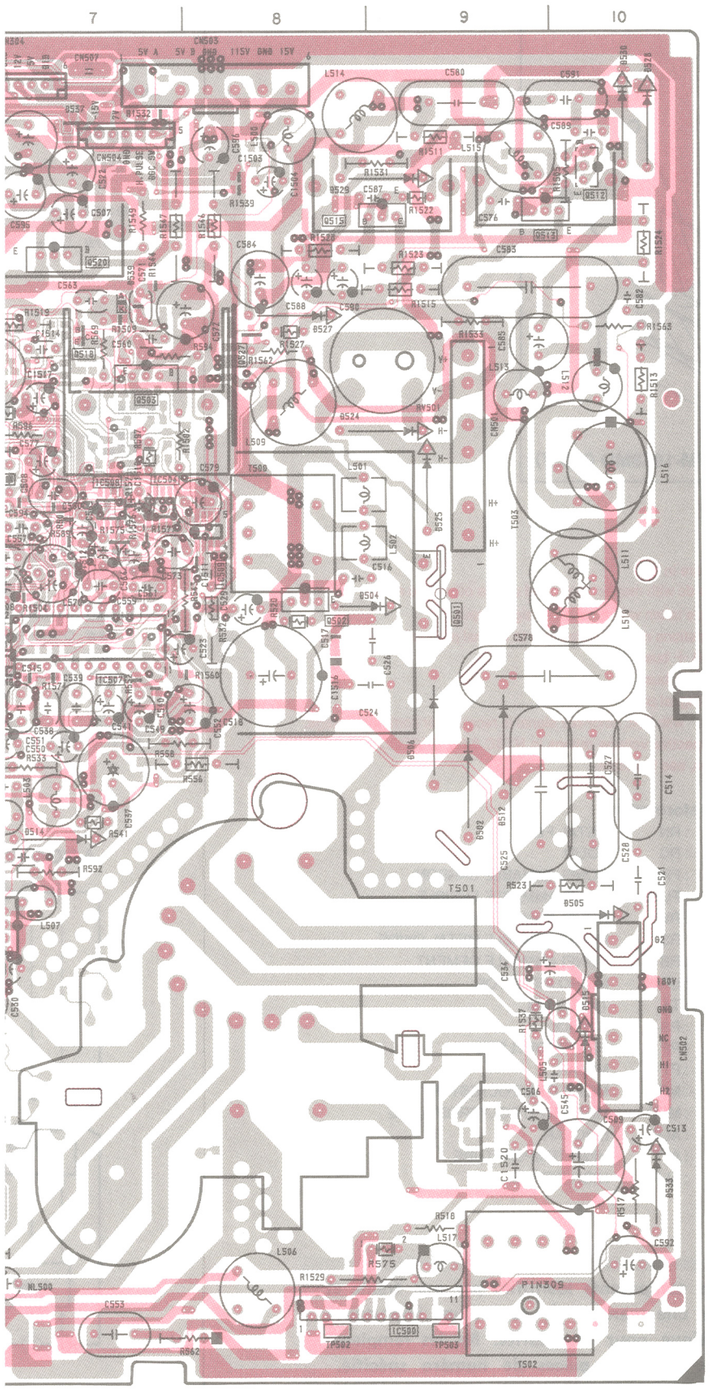

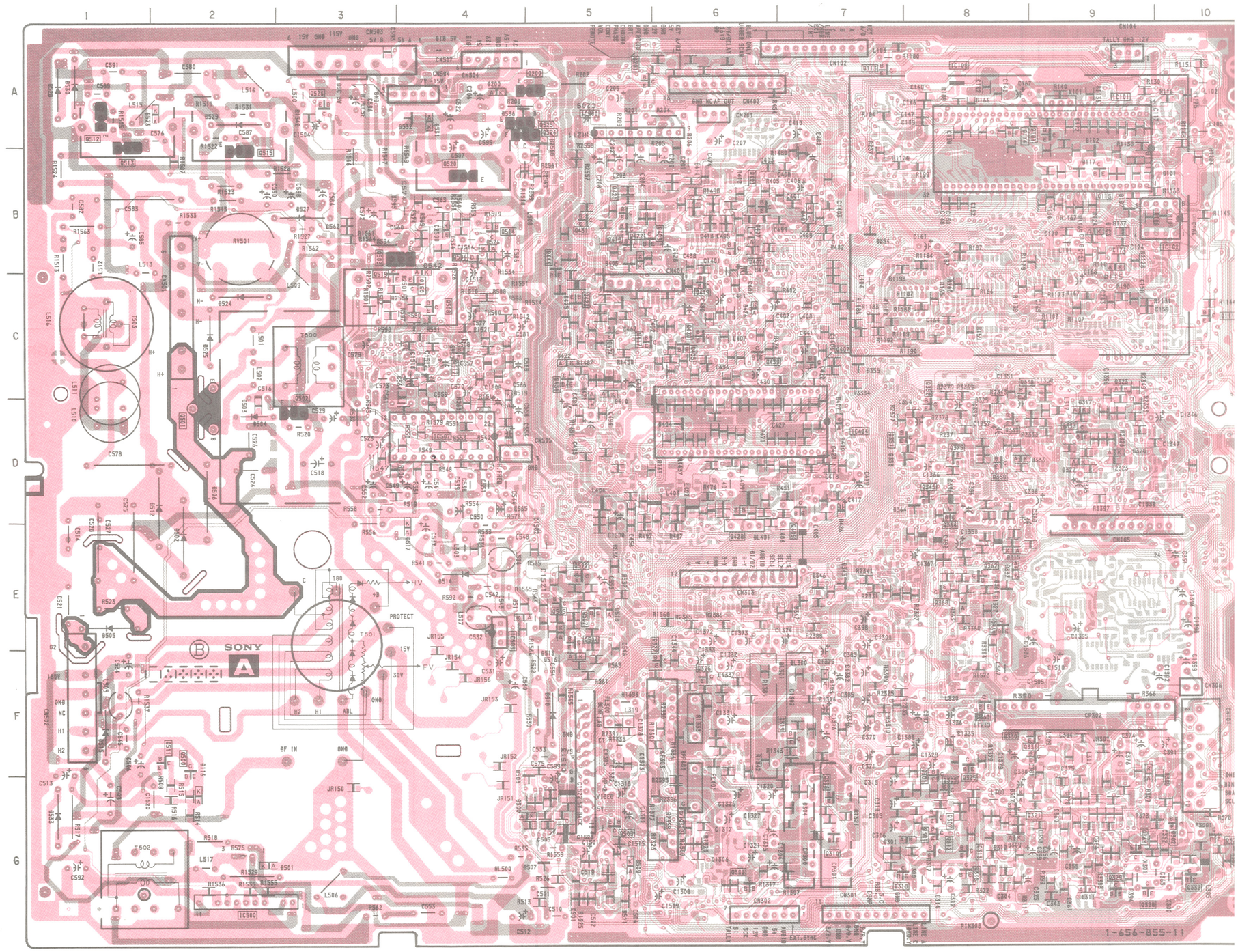

IA DEMOD, SECAM CHROMA SELECT, SYSTEM SW,
ELECT, B/B-Y SW, R/R-Y SW, G/Y SW,
SELECT, SECAM DECORDER, HOLD AMP

H/V OUT, DEFLECTION SYSTEM,
AUDIO OUT

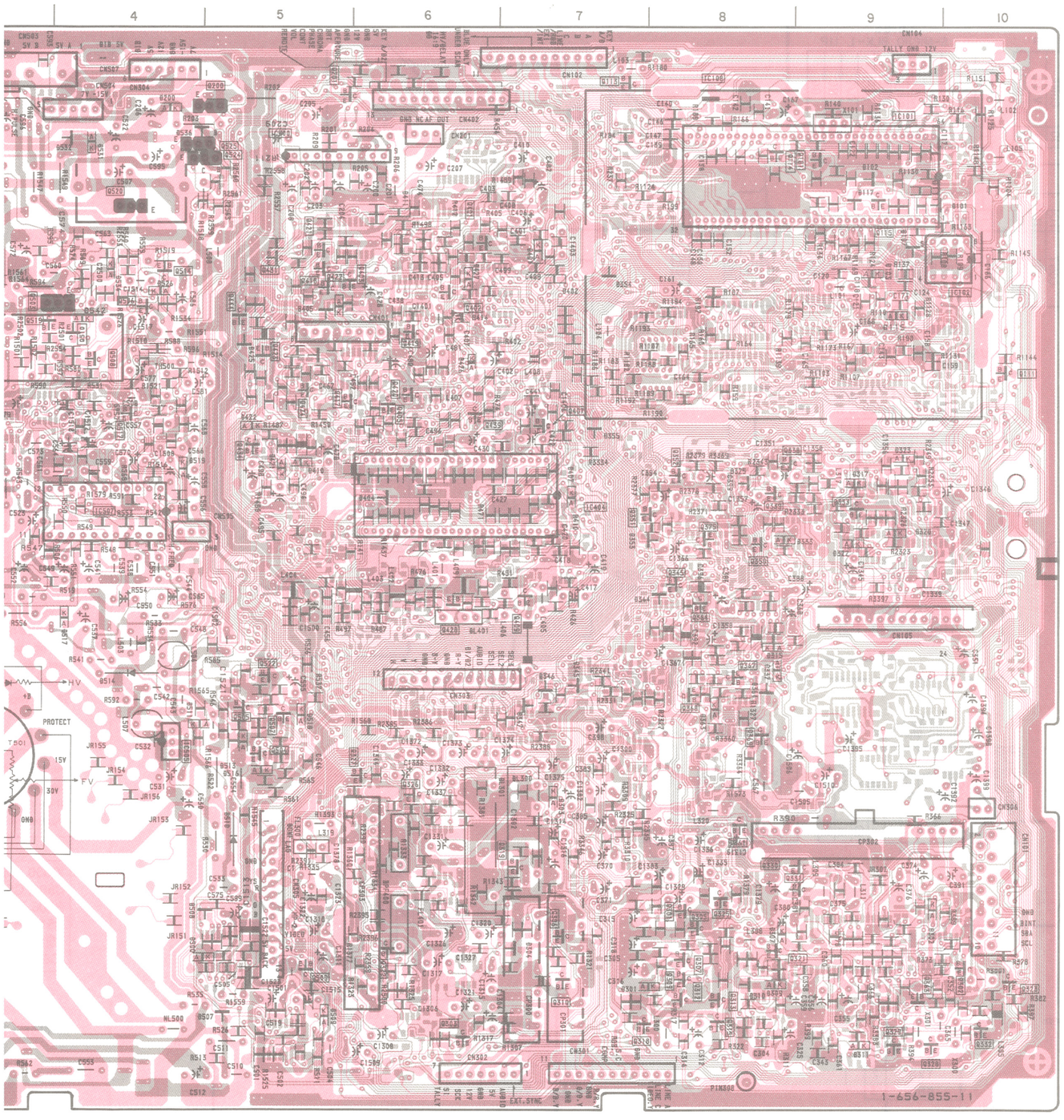

A BOARD (CONDUCTOR SIDE)

IC	
IC108	A-8

TRANSISTOR	
Q101	A-9
Q111	C-10
Q113	A-7
Q114	A-8
Q115	B-9
Q201	A-5
Q301	F-8
Q302	G-10
Q303	G-6
Q305	G-8
Q306	G-7
Q307	G-8
Q309	G-8
Q310	G-7
Q312	G-8
Q313	G-8
Q315	G-8
Q318	G-7
Q319	F-7
Q321	G-8
Q322	G-6
Q323	G-10
Q325	F-8
Q326	F-6
Q327	F-6
Q328	G-9
Q329	G-9
Q330	F-9
Q331	F-9
Q332	G-10
Q333	D-9
Q338	C-8
Q339	D-8
Q345	D-8
Q350	D-8
Q351	D-7
Q352	C-8
Q361	F-8
Q363	G-9
Q364	D-8
Q367	E-8
Q368	E-8
Q369	E-8
Q375	D-8
Q401	B-6
Q402	B-6
Q403	B-6
Q405	C-6
Q407	C-7
Q409	D-7
Q417	C-5
Q418	B-5
Q419	C-6
Q420	C-6
Q421	B-5
Q422	B-5
Q423	C-5
Q424	C-5
Q428	D-6
Q431	B-5
Q434	C-5
Q439	C-6
Q443	C-5
Q444	B-5
Q500	F-2
Q505	E-5
Q506	B-4
Q507	E-5
Q508	C-4
Q509	G-5
Q510	C-4
Q511	F-2
Q514	B-4
Q517	C-4
Q519	C-3
Q522	E-5
Q526	A-3

DIODE	
D101	B-10
D102	A-9
D103	B-9
D107	B-9
D111	B-9
D115	B-9
D116	G-2
D200	A-4
D301	G-7
D302	F-9
D303	F-7
D304	G-7
D307	G-8
D309	G-8
D310	G-8
D311	G-9
D315	E-8
D317	D-9
D320	D-9
D322	D-9
D323	C-9
D325	D-8
D333	D-8
D337	E-8
D344	D-8
D345	E-7
D346	E-7
D347	E-7
D363	E-8
D364	E-8
D401	B-7
D404	D-6
D405	B-5
D407	D-7
D408	B-5
D410	C-5
D411	B-6
D421	C-5
D422	C-5
D425	C-5
D426	C-6
D427	B-6
D500	G-4
D501	G-2
D503	D-2
D507	G-5
D508	F-4
D509	G-5
D513	E-5
D516	F-5
D517	E-4
D518	E-5
D519	C-4
D523	A-2
D526	B-4
D531	A-4
D532	A-4
D534	B-4
D536	A-4
D542	B-4

Note:
- : Pattern from the side which enables seeing.
- : Pattern of the rear.

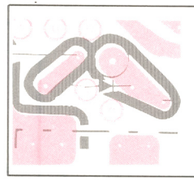

NOTE:
The circuit indicated as left contains high voltage of over 600 Vp-p. Care must be paid to prevent an electric shock in inspection or repairing.

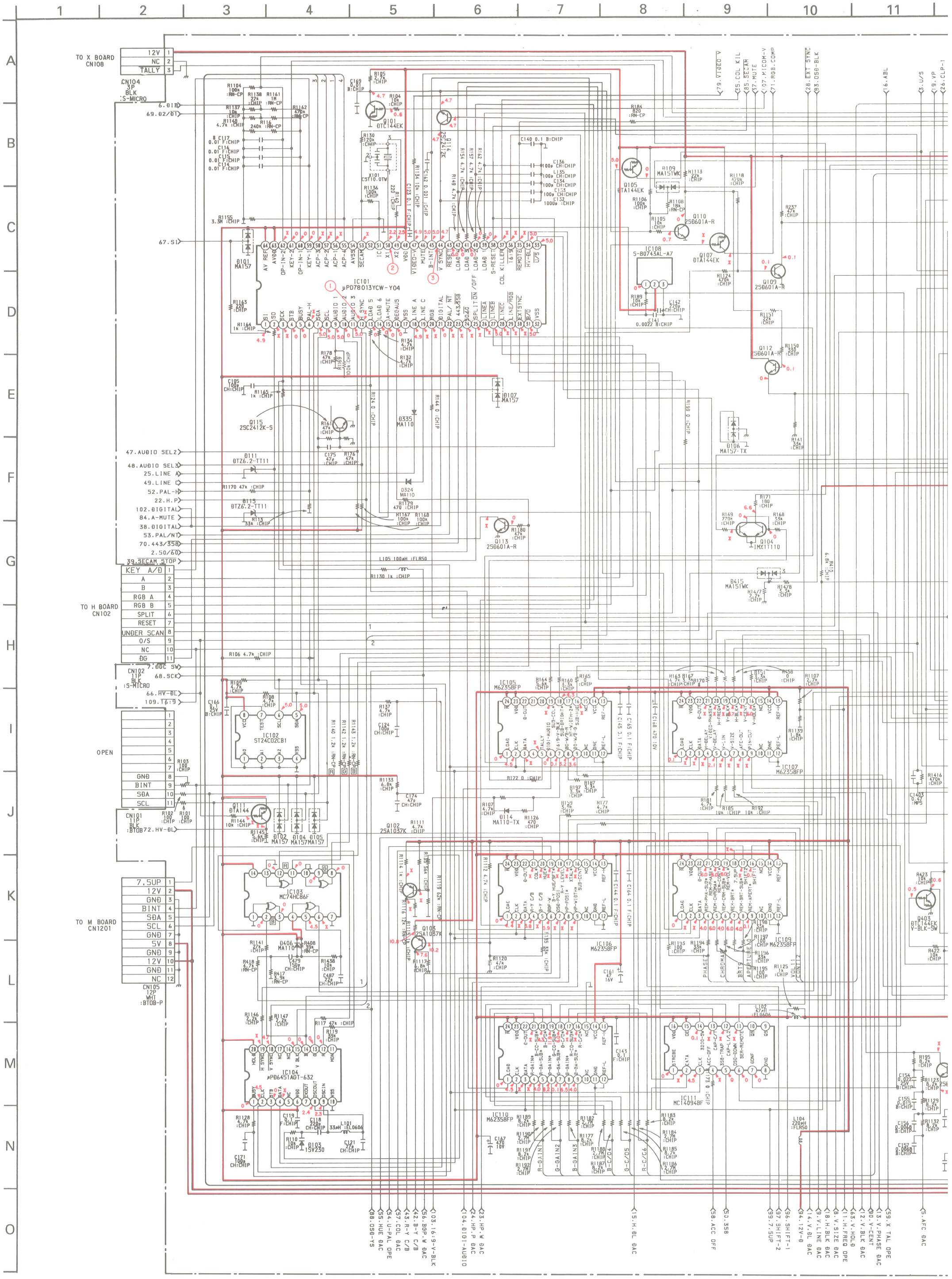
TO X BOARD CN108
12V 1
NC 2
TALLY 3
CN104 3P BLK :S-MICRO
6.DIB
69.02/DT
67.SI
IC101 μPD78013YCW-Y04
IC108 S-80743AL-A7
IC102 ST24C02CB1
IC103 MC74HC86F
IC104 μPB6451AGT-632
IC105 M62358FP
IC106 M62358FP
IC107 M62358FP
IC109 M62358FP
IC110 M62358FP
IC111 MC14094BF
Q101 DTC144EK
Q105 DTA144EK
Q107 DTA144EK
Q109 2SD601A-R
Q110 2SD601A-R
Q112 2SD601A-R
Q113 2SD601A-R
Q104 IMX1T110
Q115 2SC2412K-S
Q111 DTA144
Q102 2SA1037K
Q103 2SA1037K
Q403 DTC144EK
X101 CST10.0TW
47.AUDIO SEL2
48.AUDIO SEL3
25.LINE A
49.LINE C
52.PAL-H
22.H.P
102.DIGITAL
84.A-MUTE
38.DIGITAL
53.PAL/NT
70.443/358
2.50/60
39.SECAM STOP
KEY A/D 1
A 2
B 3
RGB A 4
RGB B 5
SPLIT 6
RESET 7
UNDER SCAN 8
O/S 9
NC 10
DG 11
TO H BOARD CN102
7.DGC SW
68.SCK
66.HV-DL
109.16:9
CN102 11P BLK :S-MICRO
OPEN
GND
BINT
SDA
SCL
CN101 11P BLK :BTOB
72.HV-DL
7.5UP 1
12V 2
GND 3
BINT 4
SDA 5
SCL 6
GND 7
5V 8
GND 9
12V 10
GND 11
NC 12
TO M BOARD CN1201
CN105 12P WHT :BTOB-P
79.VIDEO V
55.COL KIL
85.SECAM
37.MUTE
107.MICOM-V
71.RGB.COMP
28.EXT SYNC
83.050-BLK
16.ABL
3.U/S
19.YP
26.CLP-1
88.DSB-YS
55.HUE DAC
54.U-PAL DPE
57.COL DAC
43.R-Y C/B
42.B-Y C/B
56.BOP.W DAC
103.16:9-V-BLK
104.DIGI-AUDIO
23.HP.W DAC
24.HP.P DAC
15.H.BL DAC
58.ACC OFF
50.358
99.7.5UP
97.SHIFT-2
96.SHIFT-1
94.12V-B
14.V.BL DAC
9.V.LINE DAC
18.H.BLK DAC
8.V.SIZE DAC
11.H.FREQ DPE
63.V.HOLD
12.V.BLK DAC
13.V.PHASE DAC
90.V-CENT
59.X TAL DPE
5.AFC DAC

11 | 12 | 13 | 14 | 15 | 16 | 17 | 18 | 19 | 20 | 21 | 22

IC404 CXA1478S RGB-MATRIX

IC412 BU4053BCF

IC413 BU4053BCF

IC402 CXA1211M

IC403 MC14046BF-T2 BLACK-SAMPLING

IC404 LM358DR HOLD2

IC401 BA7655AF

IC409 LM324DR ON/OFF-MUTE

IC411 MC14024BF

IC410 XRA10393F

IC405 BU4053BCF-ONLY-SW

CN402 12P WHT :S-MICRO

12	REMOTE
11	VOL
10	CONT
9	PHASE
8	CHROMA
7	BRT
6	APERTURE
5	GND
4	12V
3	GND
2	5V
1	KEY A/D2

TO H C

CN401 8P WHT :S-MICRO

8	GND
7	IK
6	GND
5	12V
4	B OUT
3	G OUT
2	R OUT
1	V.P

TO C C

1	ON/OFF
2	L1/L2
3	C/T
4	GND
5	YS
6	R
7	G
8	B
9	HP-2
10	VIDEO
11	5V
12	5V BACK
13	S-RESET

CN305 13P :BTOB-P

TO S C

A (1/3)

MICON, RGB-MATRIX, DAC, ON SCREEN DISPLAY, ON/OFF-MUTE, VOL OFF SW, BLACK-SAMPLING, RGB SW

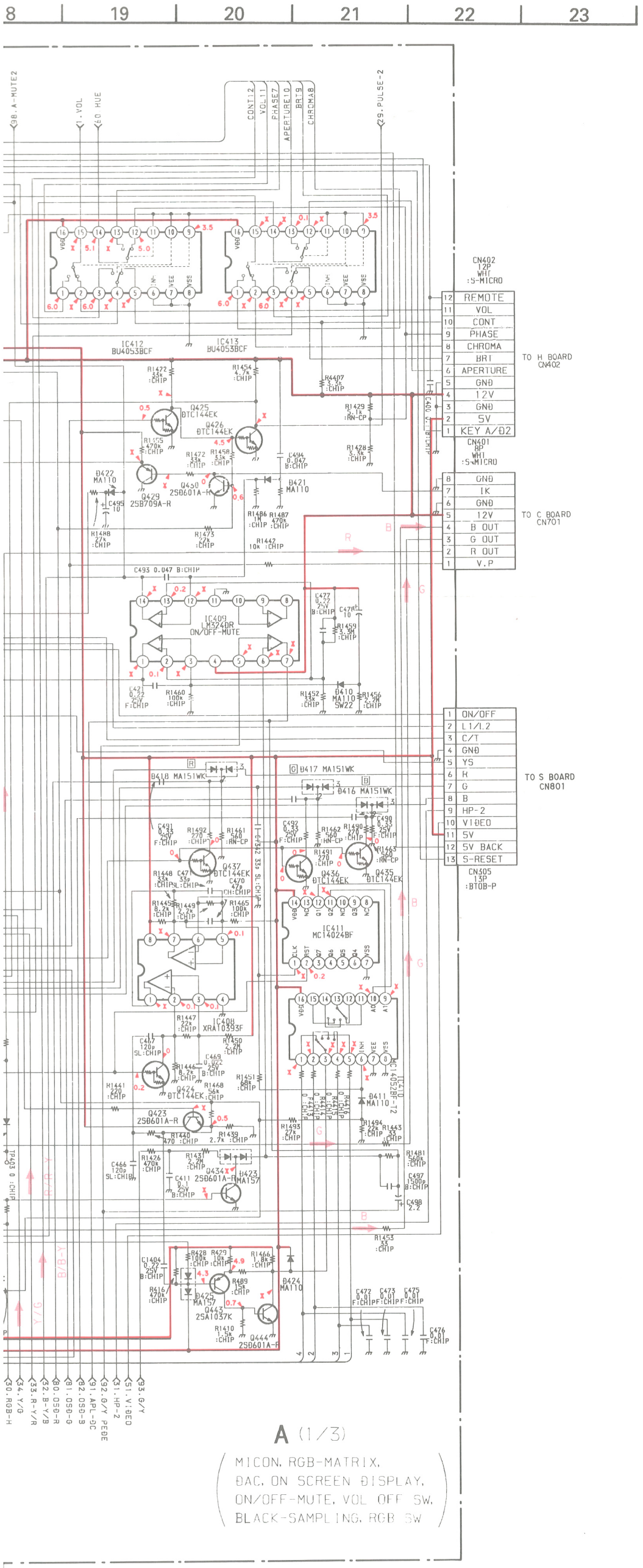

A (1/3)

MICON, RGB-MATRIX, DAC, ON SCREEN DISPLAY, ON/OFF-MUTE, VOL OFF SW, BLACK-SAMPLING, RGB SW

A (1/3) BOARD WAVEFORMS

① 5.0 Vp-p (H)	② 3.7 Vp-p (10MHz)	③ 4.8 Vp-p (V)
④ PAL 0.3 Vp-p (H)	④ NTSC3.58 0.25 Vp-p (H) S-VIDEO 0.3 Vp-p (H)	⑤ PAL 0.45 Vp-p (H)
⑤ NTSC3.58 0.35 Vp-p (H)	⑤ S-VIDEO 0.4 Vp-p (H)	⑥ PAL 0.48 Vp-p (H)
⑥ NTSC3.58 1.9 Vp-p (H)	⑥ S-VIDEO 0.57 Vp-p (H)	⑦ PAL 2.4 Vp-p (H)
⑦ NTSC3.58 2.4 Vp-p (H)	⑦ S-VIDEO 3.1 Vp-p (H)	⑦ ANALOG RGB 2.9 Vp-p (H)
⑧ ANALOG RGB 0.6 Vp-p (H)	⑨ ANALOG RGB 0.6 Vp-p (H)	⑩ ANALOG RGB 0.6 Vp-p (H)
⑪ PAL 2.3 Vp-p (H)	⑪ NTSC3.58 1.4 Vp-p (H)	⑪ S-VIDEO 2.4 Vp-p (H)
⑪ ANALOG RGB 2.5 Vp-p (H)	⑫ 4.6 Vp-p (V)	⑬ PAL 2.3 Vp-p (H)
⑬ NTSC3.58 2.68 Vp-p (H)	⑬ S-VIDEO 3.4 Vp-p (H)	⑬ ANALOG RGB 2.6 Vp-p (H)
⑭ 3.5 Vp-p (H)	⑮ 3.6 Vp-p (V)	

A (1/3) BOARD * MARK

	PAL	NTSC 3.58	S-VIDEO	ANALOG RGB
IC101 ②	1.9	1.9	1.9	1.9
③	4.3	4.3	4.3	4.3
⑥	4.1	0	0	0
⑫	3.6	3.6	3.6	3.6
⑲	0	0	4.7	0
⑳	0	0	0	4.7
㉒	4.9	0	0	0
㉓	4.8	0	0	0
㉔	4.8	0	0	0
㉕	4.8	4.8	4.7	4.7
㉖	0.1	0.1	4.9	4.8
㉘	4.8	4.8	4.8	0.1
㉙	4.8	4.8	4.8	0.1
㉚	4.8	4.8	4.8	0
㉟	3.4	3.4	3.4	3.4
㊱	0.7	0.6	0.8	0.9
㊲	0	0	0	0
㊸	4.2	4.3	4.3	4.3
㊺	0	0	0	0
㊻	0	0	0	0
㊼	0	0	0	0
㊽	0	0	0	0
㊿	0	0	0	0
IC103 ⑥	0.2	0.2	0	0
IC104 ④	2.3	2.2	2.0	2.3
⑲	3.5	3.5	3.1	3.5
IC105 ③	2.3	2.2	0	2.3
⑤	0	0.1	11.8	0
⑯	2.6	2.7	2.8	2.6
⑲	5.4	5.4	6.6	8.1
IC106 ③	2.3	2.2	2.1	2.3
⑤	5.4	5.4	4.1	5.4
⑦	2.4	2.4	0.6	2.4
⑧	7.8	7.8	5.5	7.8
⑨	5.1	5.1	4.0	5.1
⑯	0.1	10.5	10.9	10.5
⑰	3.1	2.6	2.7	2.5
⑱	2.4	2.1	2.1	3.2
⑲	6.3	11.9	10.7	3.7
⑳	3.6	4.8	4.3	9.5
㉑	0.8	0.4	2.4	3.1
IC107 ②	4.6	4.5	4.4	4.5
③	2.3	2.2	2.1	0
④	2.8	2.8	3.3	2.8
⑥	1.5	1.4	2.3	1.4
⑦	2.9	2.9	2.1	2.9
⑧	2.6	2.6	2.9	2.6
⑨	2.9	2.9	2.6	2.9
⑰	2.6	2.8	2.8	2.8
⑱	3.2	5.4	5.3	5.4
⑳	4.5	5.0	3.7	5.0
㉑	6.3	6.1	6.0	6.1
IC109 ②	4.6	4.5	4.4	4.4
③	2.3	2.2	2.1	2.3
⑰	11.9	11.9	11.9	0.1
⑱	11.9	0.1	0.1	11.8
IC110 ③	2.3	2.2	2.0	2.2
④	7.2	7.2	8.3	7.2
⑯	5.8	5.8	6.2	5.8
⑰	11.9	11.9	7.8	11.9
㉑	0	7.9	7.8	7.9
IC111 ②	2.3	2.2	2.0	2.2
④	0.3	0.3	0	0.3
⑪	0.2	0.1	0.1	0.1
⑫	0	5.0	0	5.0
⑬	5.0	5.0	0	5.0
IC402 ②	3.1	2.9	3.0	3.6
③	0	2.3	2.2	2.2
⑦	2.9	2.9	2.9	2.9
IC403 ①	0.8	0.8	0.8	0
②	1.2	0.8	1.2	0.9
③	1.4	0.9	1.3	0
④	0.8	0.9	0.8	1.4
⑤	0.6	0.6	0	0.6
⑥	0.5	0.6	0.6	0
⑧	1.0	1.0	0.8	1.1
⑨	1.6	1.1	1.4	1.6
⑩	1.4	1.0	1.2	1.5
⑪	0.9	1.0	0.8	1.1
⑬	0.6	0.6	0	0.6

A (1/3) BOARD

IC101	MICON	Q110	MUTE BUFFER	Q430	IK BLK
IC102	ECPROM	Q111	HV DC SW	Q431	RESET MUTE SW
IC103	EX-OR	Q112	MUTE BUFFER	Q432	BRIGHT MUTE SW
IC104	ON SCREEN DISPLAY	Q113	DGC SW	Q433	RGB SW
IC105	DAC 1	Q114	V SYNC AMP	Q434	MUTE RGB SW
IC106	DAC 2	Q115	MIS ACTION PROTECT	Q435	OSD DOWN SW
IC107	DAC 4	Q401	BRIGHT ABL	Q436	OSD DOWN SW
IC108	MICON RESET	Q402	PIY ABL	Q437	OSD DOWN SW
IC109	DAC 5	Q403	V-BLK-SW	Q438	BLUE ONLY SW
IC110	DAC 3	Q404	B/O G AMP 9	Q439	BCH B/O DLY-EQ 1
IC111	EXP-OUT-PORI	Q405	B-BUFF 3	Q440	BCH B/O DLY-EQ 2
IC401	BLUE-ONLY GAIN-CONT AMP	Q406	B/O G AMP 2	Q441	BCH B/O SW
IC402	R-Y GAIN-CONT AMP	Q407	B/W-SW3	Q442	BCH BUFFER
IC403	BLACK-SAMPLING	Q408	B/O R AMP 1	Q443	AUTO CMROMA SET UP AMP 1
IC404	RGB-MATRIX	Q409	B-Y-BUFF	Q444	AUTO CMROMA SET UP AMP 2
IC405	BL-ONLY-SW 1	Q410	Y BUFFER	Q445	BLUE ONLY SW
IC406	HOLD 2	Q411	B/O R AMP 2		
IC407	H-BLK-SW 2	Q412	BCH BUFFER		
IC408	EDGE DETECT	Q413	BCH NORMAL SW	D100	
IC409	ON/OFF-MUTE	Q414	R BUFFER	D101	PROTECT
IC410	SIG SELECT	Q415	G BUFFER	D102	PROTECT
IC411	COUNTER	Q416	B BUFFER	D103	OSP POSITION ADJ
IC412	VOL OFF SW 4	Q417	B-BUFF	D104	PROTECT
IC413	VOL OFF SW 2	Q418	OFF-MUTE-SW	D105	PROTECT
		Q419	G-BUFF 3	D106	
		Q420	R-BUFF-3	D107	PROTECT
Q101	V-BLK BUFFER	Q421	V-BLK-SW 1	D108	
Q102	R-Y C/B BUFFER	Q422	BLANKING	D109	MUTE
Q103	B-Y C/B BUFFER	Q423	BLUE BUFFER	D111	PROTECT
Q104	TALLY SW	Q424	BLK	D113	D. C. SHIFT
Q105	U/C SW	Q425	V-P BUFFER 1	D114	SW
Q107	RGB COMP	Q426	V-P BUFFER 2	D115	PROTECT
Q108	V SHORT SW	Q428	SHARPNESS BUFFER	D335	SW
Q109	RESET	Q429	IK BUFFER	D401	SW 15

A (1/3) BOARD WAVEFORMS

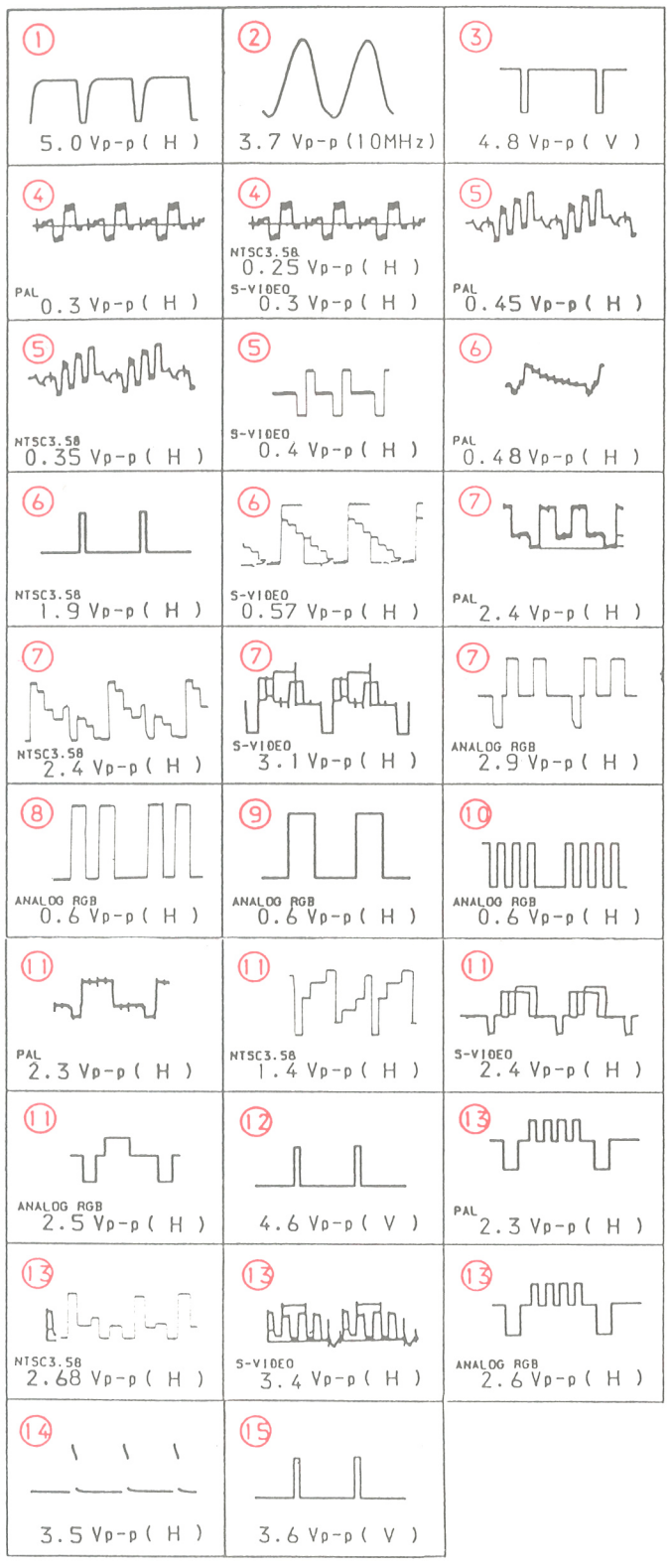

A (1/3) BOARD * MARK

	PAL	NTSC 3.58	S-VIDEO	ANALOG RGB
IC101 ②	1.9	1.9	1.9	1.9
③	4.3	4.3	4.3	4.3
⑥	4.1	0	0	0
⑫	3.6	3.6	3.6	3.6
⑲	0	0	4.7	0
⑳	0	0	0	4.7
㉒	4.9	0	0	0
㉓	4.8	0	0	0
㉔	4.8	0	0	0
㉕	4.8	4.8	4.7	4.7
㉘	0.1	0.1	4.9	4.8
㉘	4.8	4.8	4.8	0.1
㉙	4.8	4.8	4.8	0.1
㉚	4.8	4.8	4.8	0
㉟	3.4	3.4	3.4	3.4
㊱	0.7	0.6	0.8	0.9
㊲	0	0	0	0
㊸	4.2	4.3	4.3	4.3
㊺	0	0	0	0
㊻	0	0	0	0
㊼	0	0	0	0
㊽	0	0	0	0
㊿	0	0	0	0
IC103 ⑥	0.2	0.2	0	0
IC104 ④	2.3	2.2	2.0	2.3
⑲	3.5	3.5	3.1	3.5
IC105 ③	2.3	2.2	0	2.3
⑤	0	0.1	11.8	0
⑯	2.6	2.7	2.8	2.6
⑲	5.4	5.4	6.6	8.1
IC106 ③	2.3	2.2	2.1	2.3
⑤	5.4	5.4	4.1	5.4
⑦	2.4	2.4	0.6	2.4
⑧	7.8	7.8	5.5	7.8
⑨	5.1	5.1	4.0	5.1
⑩	0.1	10.5	10.9	10.5
⑰	3.1	2.6	2.7	2.5
⑱	2.4	2.1	2.1	3.2
⑲	6.3	11.9	10.7	3.7
⑳	3.6	4.8	4.3	9.5
㉑	0.8	0.4	2.4	3.1
IC107 ②	4.6	4.5	4.4	4.5
③	2.3	2.2	2.1	0
④	2.8	2.8	3.3	2.8
⑥	1.5	1.4	2.3	1.4
⑦	2.9	2.9	2.1	2.9
⑧	2.6	2.6	2.9	2.6
⑨	2.9	2.9	2.6	2.9
⑰	2.6	2.8	2.8	2.8
⑲	3.2	5.4	5.3	5.4
⑳	4.5	5.0	3.7	5.0
㉑	6.3	6.1	6.0	6.1
IC109 ②	4.6	4.5	4.4	4.4
③	2.3	2.2	2.1.	2.3
⑰	11.9	11.9	11.9	0.1
⑱	11.9	0.1	0.1	11.8
IC110 ③	2.3	2.2	2.0	2.2
④	7.2	7.2	8.3	7.2
⑯	5.8	5.8	6.2	5.8
⑰	11.9	11.9	7.8	11.9
㉑	0	7.9	7.8	7.9
IC111 ②	2.3	2.2	2.0	2.2
④	0.3	0.3	0	0.3
⑪	0.2	0.1	0.1	0.1
⑫	0	5.0	0	5.0
⑬	5.0	5.0	0	5.0
IC402 ②	3.1	2.9	3.0	3.6
③	0	2.3	2.2	2.2
⑦	2.9	2.9	2.9	2.9
IC403 ①	0.8	0.8	0.8	0
②	1.2	0.8	1.2	0.9
③	1.4	0.9	1.3	0
④	0.8	0.9	0.8	1.4
⑤	0.6	0.6	0	0.6
⑥	0.5	0.6	0.6	0
⑧	1.0	1.0	0.8	1.1
⑨	1.6	1.1	1.4	1.6
⑩	1.4	1.0	1.2	1.5
⑪	0.9	1.0	0.8	1.1
⑬	0.6	0.6	0	0.6

	PAL	NTSC 3.58	S-VIDEO	ANALOG RGB
IC404 ⑥	3.0	3.0	4.5	0
⑦	4.9	4.9	4.7	6.1
⑩	5.6	5.6	5.6	5.8
⑫	5.6	5.6	5.6	5.8
⑯	0	0	0	4.4
㉕	3.8	4.1	4.0	3.6
㉘	7.1	8.0	7.7	7.9
㉚	1.4	1.2	1.2	1.4
㉞	7.0	8.1	7.8	7.8
㉟	1.4	1.2	1.2	1.5
㊱	7.8	7.7	8.0	7.7
㊴	6.9	7.8	7.6	7.6
㊶	1.2	1.0	1.2	1.3
㊹	7.2	7.2	8.3	7.2
㊻	7.2	7.2	6.9	7.0
㊼	6.6	6.6	5.5	0
IC405 ①	1.6	1.1	1.4	1.6
②	1.4	0.9	1.2	1.5
③	1.2	0.9	1.1	1.2
④	1.4	1.0	1.2	1.4
⑤	1.3	1.0	1.2	1.4
⑩	0.5	0.6	0.3	0.2
⑪	0.5	0.6	0.3	0.2
⑫	1.2	0.8	1.2	1.3
⑬	1.4	0.9	1.3	1.4
⑭	1.2	0.8	1.2	1.3
⑮	1.4	1.0	1.2	1.5
IC406 ①	4.8	4.8	4.8	5.1
③	0.8	0.9	0.8	1.0
⑤	1.0	1.0	0.8	1.1
⑥	1.0	1.1	0.8	1.1
⑦	5.1	4.9	4.9	5.1
IC407 ①	1.2	0.9	1.2	1.3
②	0.4	0.5	0.4	0.5
③	1.4	1.0	1.2	1.4
④	0.6	0.7	0.5	0.7
⑤	2.0	2.0	2.0	2.0
⑥	11.7	11.6	11.7	11.2
⑧	5.5	5.5	5.4	8.5
⑨	5.5	5.5	5.4	8.4
⑩	1.4	1.0	1.2	1.5
⑪	0.6	0.7	0.5	0.6
⑫	2.0	2.0	2.0	2.0
⑬	2.0	2.0	2.0	2.0
IC408 ①	3.1	2.9	3.7	3.4
⑦	4.1	3.9	4.2	4.1
IC409 ①	0	9.0	0	7.5
③	0	0.4	0.3	1.6
⑤	5.9	6.3	5.9	5.9
⑥	5.9	6.3	5.9	5.9
⑦	5.9	6.3	5.9	5.9
⑫	0.1	0.5	0.1	0
⑭	0	6.6	0	10.7
IC410 ①	3.8	4.0	0	3.9
②	3.0	2.4	0	4.0
③	1.3	1.4	2.3	1.5
④	3.5	3.0	3.9	3.9
⑤	0.6	1.1	3.1	1.7
⑧	4.0	4.0	0	0
⑨	0	1.9	2.5	1.4
⑩	2.0	2.3	1.8	3.0
IC411 ①	4.1	3.9	4.2	4.1
⑪	1.8	1.9	2.5	1.3
⑫	2.0	2.3	1.8	3.0
IC412 ②	0.4	0.4	5.9	0.6
④	8.9	8.9	8.9	8.3
⑤	9.0	9.0	8.9	8.3
⑬	6.0	6.0	6.0	0
⑮	0.4	0.4	5.9	0.5
IC413 ②	7.9	8.0	0	6.9
④	0	5.5	5.4	0
⑤	5.5	5.5	5.4	8.6
⑫	3.1	3.1	0	5.1
⑭	3.1	3.1	6.0	5.1
⑮	7.9	8.0	6.3	6.9
Q102 B	10.9	10.9	10.7	10.9
C	8.1	8.1	0	8.1
E	11.5	11.5	11.3	11.5
Q104·1 B	−0.2	−0.2	0	−0.2
Q107 B	5.0	5.0	5.0	0.1
C	0	0	0	5.0
Q108 C	2.6	2.6	2.9	2.6
E	2.6	2.6	2.9	2.6
Q111 B	5.0	0	4.9	4.9
C	0.4	0	0.4	0.4
Q113 C	4.1	4.2	3.8	4.0

	PAL	NTSC 3.58	S-VIDEO	ANALOG RGB
Q401 B	1.1	1.5	1.2	1.0
C	7.5	6.0	8.4	10.0
E	1.4	3.2	3.1	1.0
Q402 B	0.5	0.5	2.4	0.5
C	9.5	8.1	10.4	6.9
E	1.4	3.2	3.2	1.0
Q404 B	5.3	4.9	5.3	5.2
E	6.1	6.0	6.1	6.2
Q405 B	1.3	1.2	1.2	1.4
Q406 B	0.7	0	0.7	0.7
C	1.6	1.0	1.4	1.6
Q407 B	0	0	0	0.6
C	6.6	6.6	5.4	0
Q408 B	5.3	4.9	5.2	5.2
E	6.0	5.9	6.0	6.1
Q409 B	1.9	1.6	1.7	1.6
E	2.0	2.2	2.3	2.2
Q411 C	1.4	0.9	1.3	1.4
Q412 B	1.3	1.0	1.1	1.4
E	2.0	1.7	1.8	2.0
Q413 G	2.0	1.6	1.8	−2.1
D	2.0	−4.3	2.2	2.0
S	2.0	1.7	1.8	2.0
Q417 B	1.4	1.2	1.2	1.4
Q418 C	2.1	1.7	1.7	2.0
Q419 B	1.4	1.2	1.2	1.5
E	2.0	1.7	1.8	2.0
Q420 B	1.2	1.0	1.2	1.3
E	1.8	1.6	1.8	1.9
Q422 C	2.1	1.7	1.8	2.0
Q423 B	0.5	0.4	0.4	0.2
Q425 C	4.5	4.5	4.7	4.5
Q426 C	0.8	0.7	0.7	0
Q429 B	0.1	0.4	0.1	0.1
E	0	−1.2	0.4	0.4
Q432 B	−0.3	−3.4	−0.1	−3.9
C	11.9	11.8	120	11.6
Q433 B	0	0	0	2.7
C	3.0	3.0	4.5	0
Q434 B	−0.1	0	−0.1	0.4
C	3.6	4.5	2.9	0
Q438 B	−0.4	−3.1	0	−2.4
C	11.7	11.7	11.6	11.7
Q439 B	2.0	1.8	1.8	2.0
E	2.6	2.4	0	2.6
Q440 B	2.6	2.5	2.4	2.7
Q441 G	−1.1	1.7	0	−0.7
D	2.0	−8.1	1.8	2.0
S	2.0	1.6	1.8	2.0
Q442 B	1.3	1.1	1.1	2.1
E	0.9	0.7	0.7	1.5
Q444 C	1.2	1.2	2.2	1.3
Q445 C	0.4	1.4	0.3	0.4

(1/3) BOARD

101	MICON	Q110	MUTE BUFFER	Q430	IK BLK	D404	SW
102	ECPROM	Q111	HV DC SW	Q431	RESET MUTE SW	D405	BLANKING
103	EX-OR	Q112	MUTE BUFFER	Q432	BRIGHT MUTE SW	D406	SW SLICE
104	ON SCREEN DISPLAY	Q113	DGC SW	Q433	RGB SW	D407	RGB SW
105	DAC 1	Q114	V SYNC AMP	Q434	MUTE RGB SW	D408	BLANKING
106	DAC 2	Q115	MIS ACTION PROTECT	Q435	OSD DOWN SW	D410	SW
107	DAC 4	Q401	BRIGHT ABL	Q436	OSD DOWN SW	D411	SW
108	MICON RESET	Q402	PIY ABL	Q437	OSD DOWN SW	D414	OSD MODE SW
109	DAC 5	Q403	V-BLK-SW	Q438	BLUE ONLY SW	D415	OSD BLK-INSERT
110	DAC 3	Q404	B/O G AMP 9	Q439	BCH B/O DLY-EQ 1	D416	OSD B MIX
111	EXP-OUT-PORI	Q405	B-BUFF 3	Q440	BCH B/O DLY-EQ 2	D417	OSD G MIX
401	BLUE-ONLY GAIN-CONT AMP	Q406	B/O G AMP 2	Q441	BCH B/O SW	D418	OSD R MIX
402	R-Y GAIN-CONT AMP	Q407	B/W-SW3	Q442	BCH BUFFER	D421	SW
403	BLACK-SAMPLING	Q408	B/O R AMP 1	Q443	AUTO CMROMA SET UP AMP 1	D422	SW
404	RGB-MATRIX	Q409	B-Y-BUFF	Q444	AUTO CMROMA SET UP AMP 2	D423	CLAMP
405	BL-ONLY-SW 1	Q410	Y BUFFER	Q445	BLUE ONLY SW	D424	PROTECT
406	HOLD 2	Q411	B/O R AMP 2			D425	CLAMP
407	H-BLK-SW 2	Q412	BCH BUFFER			D426	D. C. SHIFT
408	EDGE DETECT	Q413	BCH NORMAL SW	D100		D427	PROTECT
409	ON/OFF-MUTE	Q414	R BUFFER	D101	PROTECT		
410	SIG SELECT	Q415	G BUFFER	D102	PROTECT		
411	COUNTER	Q416	B BUFFER	D103	OSP POSITION ADJ		
412	VOL OFF SW 4	Q417	B-BUFF	D104	PROTECT		
413	VOL OFF SW 2	Q418	OFF-MUTE-SW	D105	PROTECT		
		Q419	G-BUFF 3	D106			
		Q420	R-BUFF-3	D107	PROTECT		
101	V-BLK BUFFER	Q421	V-BLK-SW 1	D108			
102	R-Y C/B BUFFER	Q422	BLANKING	D109	MUTE		
103	B-Y C/B BUFFER	Q423	BLUE BUFFER	D111	PROTECT		
104	TALLY SW	Q424	BLK	D113	D. C. SHIFT		
105	U/C SW	Q425	V-P BUFFER 1	D114	SW		
107	RGB COMP	Q426	V-P BUFFER 2	D115	PROTECT		
108	V SHORT SW	Q428	SHARPNESS BUFFER	D335	SW		
109	RESET	Q429	IK BUFFER	D401	SW 15		

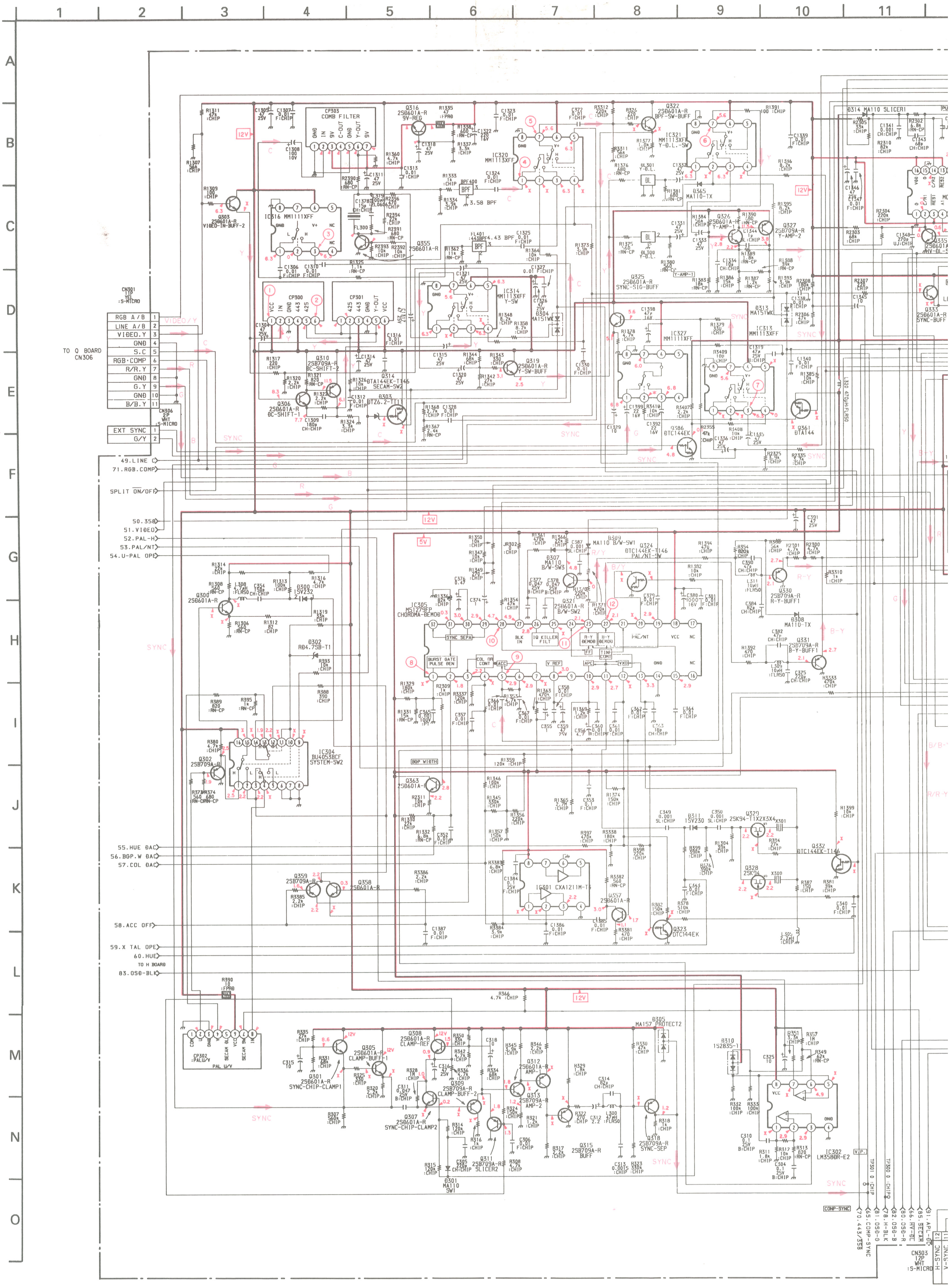
CP303 COMB FILTER
IC316 MM1111XFF
IC320 MM1113XFF
IC321 MM1113XFF Y-D.L.-SW
IC314 MM1113XFF Y-SW
IC327 MM1111XFF
IC313 MM1113XFF
Q322 2SD601A-R BPF-SW-BUFF
Q326 2SD601A-R Y-AMP-1
Q327 2SB709A-R Y-AMP-2
Q325 2SD601A-R SYNC-SIG-BUFF
Q365 MA110-TX
Q355 2SD601A-R
Q316 2SD601A-R 9V-REG
Q303 2SD601A-R VIDEO-IN-BUFF-2
Q310 2SB709A-R DC-SHIFT-2
Q306 2SD601A-R DC-SHIFT-1
Q314 DTA144EK-T146 SECAM-SW2
Q303 DTZ6.2-TT11
Q319 2SD601A-R Y-SW-BUFF
Q313 MA151WK
Q304 MA151WK
Q333 2SD601A-R SYNC-BUFF
Q314 MA110 SLICER1
Q335 2SD601A-R V-DL-
Q324 DTC144EK-T146 PAL/NT-SW
Q307 MA110 B/W-SW1
Q321 2SD601A-R B/W-SW2
Q330 2SB709A-R R-Y-BUFF1
Q331 2SB709A-R B-Y-BUFF1
Q308 MA110-TX
Q329 2SK94-T1X2X3X4
Q328 2SK94
Q332 DTC144EK-T146
Q357 2SD601A-R
Q323 DTC144EK
Q361 DTA144
Q386 DTC144EK
Q300 2SD601A-R
Q302 2SB709A-R
Q302 RD4.7SB-T1
Q301 2SD601A-R SYNC-CHIP-CLAMP1
Q305 2SD601A-R CLAMP-BUFF-1
Q308 2SD601A-R CLAMP-REF
Q309 2SB709A-R CLAMP-BUFF-2
Q307 2SD601A-R SYNC-CHIP-CLAMP2
Q312 2SD601A-R AMP-1
Q313 2SB709A-R AMP-2
Q315 2SB709A-R BUFF
Q318 2SB709A-R SYNC-SEP
Q311 2SB709A-R SLICER2
Q301 MA110 SW1
Q359 2SB709A-R
Q358 2SD601A-R
IC305 MS1279FP CHROMA-DEMOD
IC304 BU4053BCF SYSTEM-SW2
IC301 CXA1211M-T6
IC302 LM358DR-E2
CP300
CP301
CP302 :PAL/V
CN301 11P :S-MICRO
CN306 2P WHT :S-MICRO
CN303 12P WHT :S-MICRO
TO Q BOARD CN306
RGB A/B
LINE A/B
VIDEO.Y
GND
S.C
RGB·COMP
R/R.Y
GND
G.Y
GND
B/B.Y
EXT SYNC
G/Y
VIDEO/Y
49.LINE C
71.RGB.COMP
SPLIT ON/OFF
50.358
51.VIDEO
52.PAL-H
53.PAL/NT
54.U-PAL OPE
55.HUE DAC
56.BGP.W DAC
57.COL DAC
58.ACC OFF
59.X TAL OPE
60.HUE
TO H BOARD
83.050-BLK
12V
5V
SYNC
BOP WIDTH
CONP-SYNC
70.443/358
81.050-G
78.H-BLK
82.050-B
80.050-R
66.R-Y-DC
85.SECAM
91.APL-DET
CN303.5
CN303.4
CN303.3
CN303.2
CN303.1
R/R-Y
B/B-Y
G
B
R
L320 470μH:FLR50
L300 47μH:FLR50
L309 10μH:FLR50
L311 10μH:FLR50

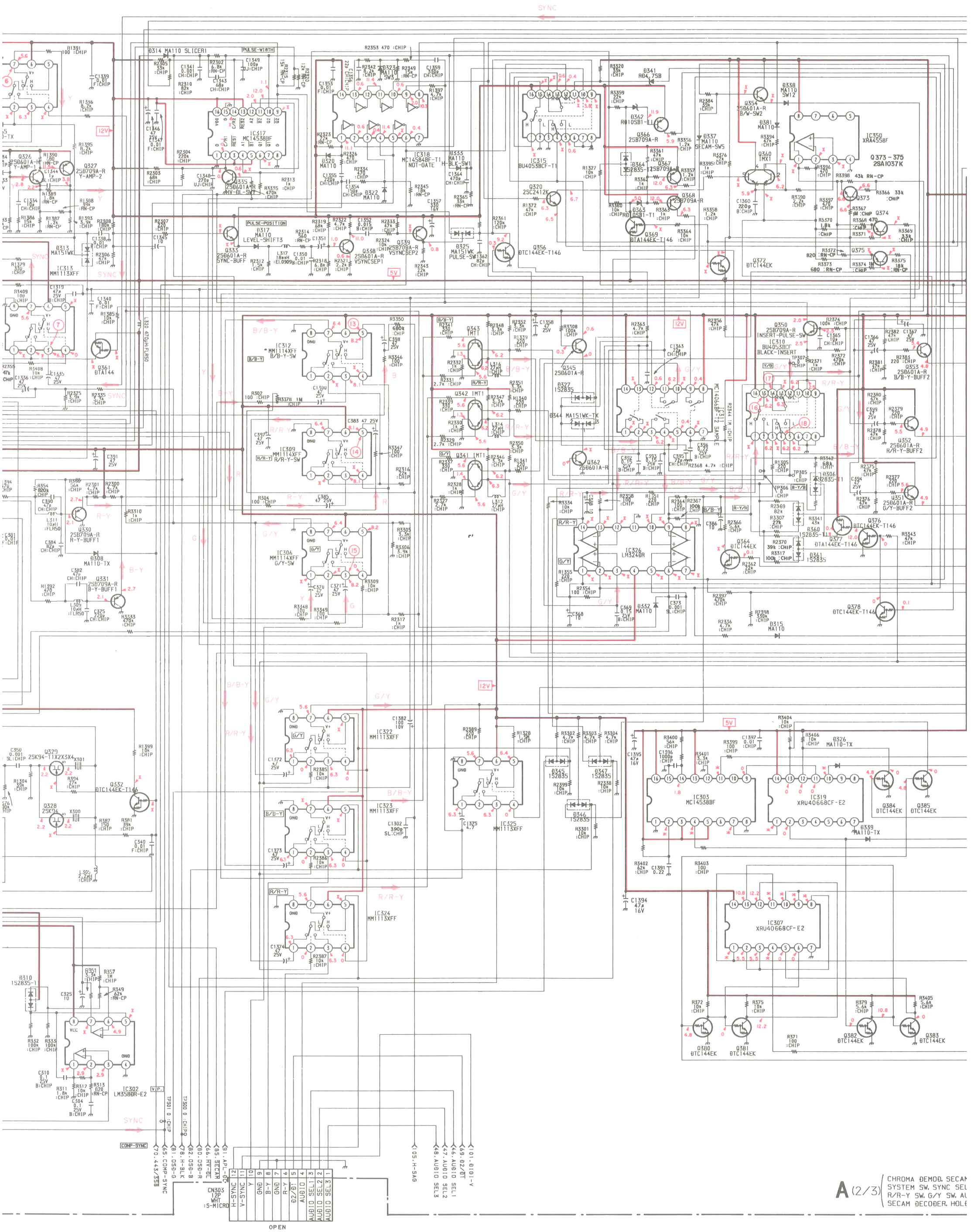
SYNC
12V
5V
PULSE-WIDTH
PULSE-POSITION
Q314 MA110 SLICER1
IC317 MC14538BF
IC318 MC14584BF-T1 NOT-GATE
IC315 BU4053BCF-T1
IC326 LM324DR
IC310 BU4053BCF BLACK-INSERT
IC311 MC14066BF-T2 SAMPLE
IC312 MM1114XFF B/B-Y-SW
IC309 MM1114XFF R/R-Y-SW
IC306 MM1114XFF G/Y-SW
IC322 MM1113XFF
IC323 MM1113XFF
IC324 MM1113XFF
IC325 MM1113XFF
IC313 MM1113XFF
IC303 MC14538BF
IC319 XRU40668CF-E2
IC307 XRU40668CF-E2
IC302 LM358DR-E2
IC350 XRA4558F
Q373 - 375 2SA1037K
CN303 12P WHT :S-MICRO
OPEN
CONP-SYNC
A (2/3) CHROMA DEMOD, SECAM SYSTEM SW, SYNC SEL R/R-Y SW, G/Y SW, AU SECAM DECODER, HOLD

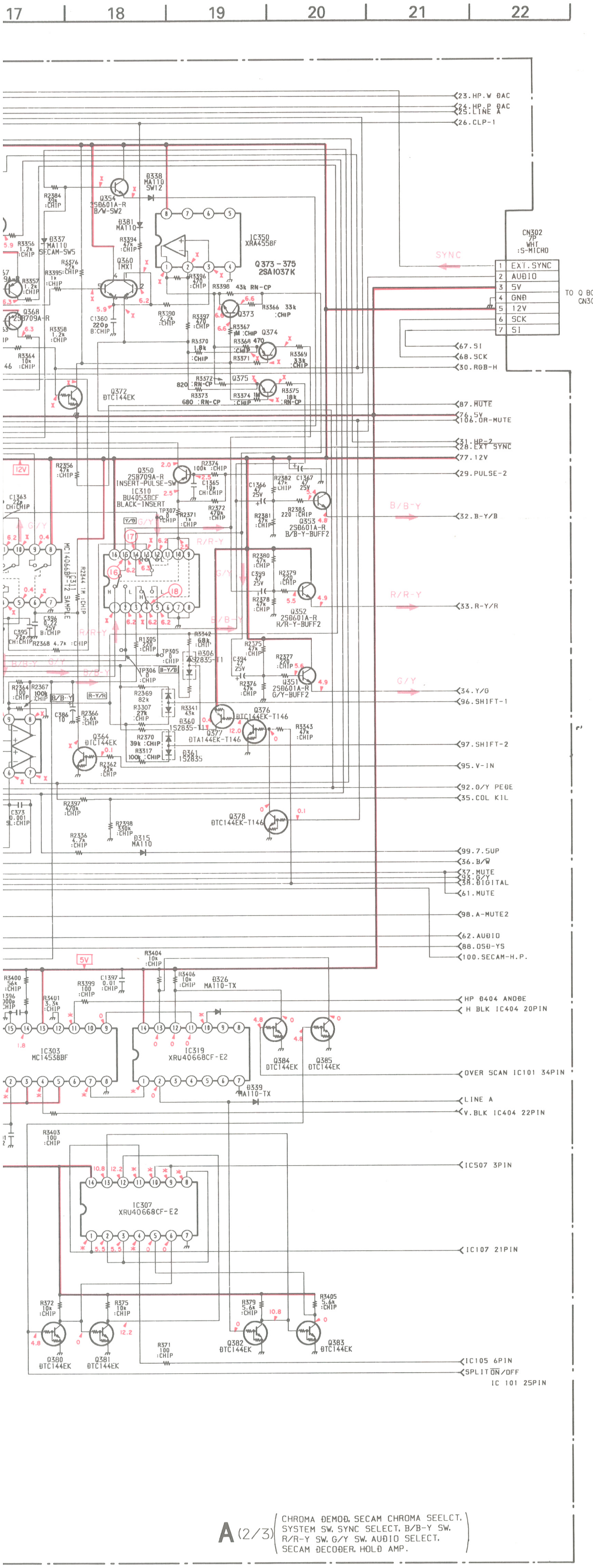

A (2/3) BOARD WAVEFORMS

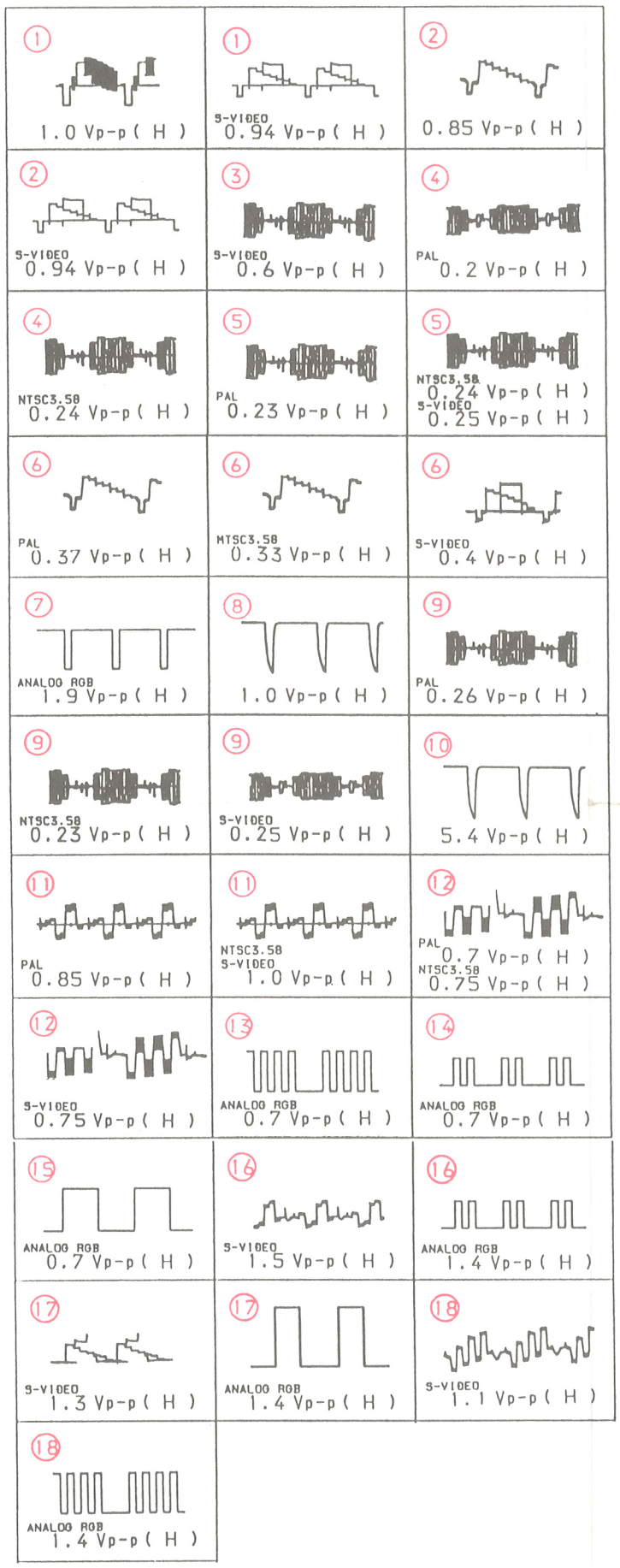

A (2/3) BOARD

IC301	ACC OFF. GAIN-CONT. AMP	Q308	CLAMP-REF	Q35
IC302	PAL-60-ID2	Q309	CLAMP-BUFF-2	Q35
IC303	O/S H BLANK/SPLIT POSITION	Q310	PAL TRAP BUFFER 2	Q35
IC304	SYSTEM-SW	Q311	SLICER 2	Q35
IC305	CHROMA-DEMOD	Q312	AMP-1	Q35
IC306	G/Y-SW	Q313	AMP-2	Q36
IC307	AFC SW	Q314	SECAA SW	Q36
IC309	R/R-Y/SW	Q315	BUFF	Q36
IC310	BLACK-INSERT	Q316	NT-COMB-D.C.-REF	Q36
IC311	SAMPLE	Q318	SYNC-SEF	Q36
IC312	B/B-Y-SW	Q319	Y-SW-BUFF	Q36
IC313	SYNC SELECT	Q320	BUFFER	Q36
IC314	Y-SW	Q321	B/W-SW 2	Q36
IC315	PULSE SELECT	Q323	PAL SW	Q36
IC316	SECAM CHROMA SELECT	Q324	PAL SW	Q37
IC317	H-PULSE-GATE	Q325	SYNC-SIG-BUFF	Q37
IC318	NOT-GATE	Q326	Y-AMP-1	Q37
IC319	SW	Q327	Y-AMP-2	Q37
IC320	CHROMA BPF SELECT	Q328	443 SW	Q37
IC321	Y-D.L.-SW	Q329	358 SW	Q37
IC322	G/Y SW SELECT	Q330	R-Y-BUFF 1	Q37
IC323	B/B-Y SW SELECT	Q331	B-Y-BUFF 1	Q38
IC324	R/R-Y SW SELECT	Q332	358 SW	Q38
IC325	AUDIO SELECT	Q333	SYNC-BUFF	Q38
IC326	HOLD AMP	Q335	HV-DL SW	Q38
IC327	SYNC SW	Q338	V-SYNC SSP 1	Q38
IC350	BUFFER AMP	Q339	V-SYNC SSP 2	Q38
		Q341	G/Y BUFFER	Q38
		Q342	R/R-Y BUFFER	
Q300	PHASE SHIFT	Q343	B/B-Y BUFFER	
Q301	SYNC-SHIP CLAMP 1	Q345	MUTE SW	D3C
Q302	BUFFER	Q350	INSERT-PULSE SW	D3C
Q303	VIDEO-IN-BUFF-1	Q351	G/Y-BUFF-2	D3C
Q305	CLAMP-BUFF-1	Q352	R/R-Y-BUFF-2	D3C
Q306	PAL TRAP BUFFER 1	Q353	B/B-Y-BUFF-2	D3C
Q307	SYNC-CHIP-CLAMP 2	Q354	B/W-SW2	D3C

A (2/3) BOARD WAVEFORMS

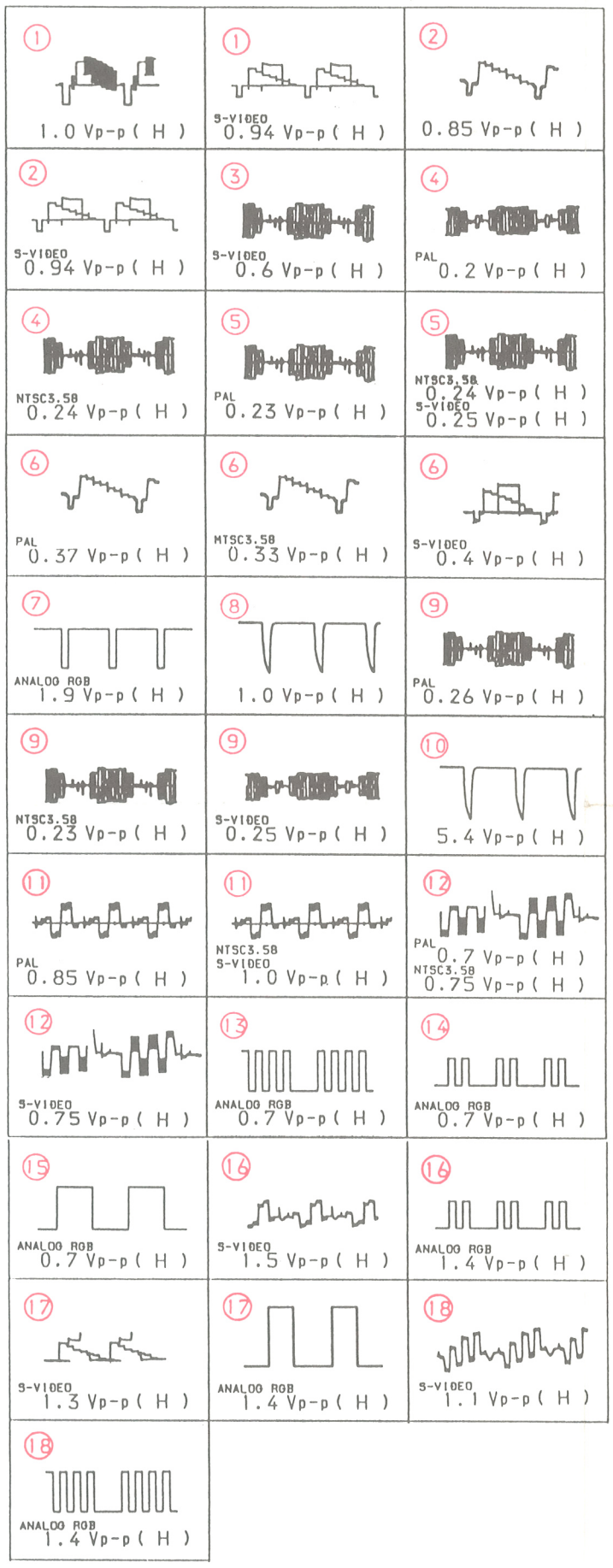

A (2/3) BOARD * MARK

	PAL	NTSC 3.58	S-VIDEO	ANALOG RGB
IC301 ①	2.8	2.8	3.0	2.3
②	2.0	1.8	1.7	3.5
IC302 ①	2.9	2.9	2.9	2.9
⑤	5.3	4.5	4.5	4.5
⑦	10.5	0	0	0
IC303 ②	2.2	2.0	2.0	2.0
④	0.6	0.5	0.5	0.5
⑦	1.0	0.4	0.5	0.2
⑪	0.2	0.2	0.3	0.3
IC304 ④	2.2	2.2	2.2	2.2
⑨	9.4	9.4	9.4	9.4
⑩	7.3	2.5	2.6	2.5
⑪	7.3	2.5	2.6	2.5
⑭	1.9	2.2	2.2	2.2
⑮	2.5	2.2	2.3	2.2
IC305 ①	2.8	2.8	2.8	2.8
④	2.5	2.5	2.4	1.3
⑦	4.1	4.1	4.2	4.5
⑨	0.4	0	0	0.1
⑫	2.6	2.5	2.5	2.7
⑳	0	0.8	0.9	0.9
㉕	2.1	1.9	1.9	2.7
IC306 ①	8.1	8.1	8.1	0
②	0	0	0.1	4.4
IC307 ①	4.2	5.5	5.5	5.5
④	4.4	5.7	5.7	5.7
⑧	4.2	5.5	5.5	5.5
⑨	4.2	5.5	5.5	5.5
⑩	4.2	5.5	5.5	5.5
⑪	4.2	5.5	5.5	5.5
IC309 ②	3.6	3.6	3.6	3.6
④	0	0	0	4.4
IC310 ①	6.2	6.2	6.2	5.9
③	6.3	6.2	6.2	5.9
⑬	5.9	6.0	5.9	5.9
IC311 ①	0	6.2	6.2	6.2
②	6.2	6.2	6.2	5.9
④	6.2	6.3	6.2	5.9
⑥	3.3	2.9	2.9	0
⑩	5.9	5.9	5.8	5.9
⑬	0.4	0.4	0.5	0.7
IC312 ②	3.6	3.6	3.6	3.6
④	0	0	0.1	4.5
IC313 ①	0	0	6.3	6.3
IC314 ②	0	7.6	3.0	0
④	0	0	2.9	0.1
IC315 ①	0.4	0.4	0.4	0.6
④	0.6	0.6	0.6	0.6
⑨	9.4	9.3	9.3	9.4
⑪	2.5	2.5	2.5	7.2
⑭	0.4	0.4	0.4	0.6
⑮	0.4	0.4	0.4	0.6
IC317 ④	2.0	2.0	2.0	12.0
⑥	12.0	12.0	12.0	12.0
⑨	10.7	10.6	10.5	10.7
⑭	9.4	9.4	9.1	9.4
IC318 ⑤	11.5	0	11.4	11.4
IC319 ①	1.0	0.4	0.5	0.2
⑩	0.6	0.5	0.4	0.5
IC320 ①	6.3	6.3	6.3	0
②	3.0	0	0	0
④	0	0	3.3	0
IC321 ②	0	0.1	2.9	0
④	0	0	0.1	2.7
IC322 ⑤	5.8	6.0	5.9	5.9
IC323 ⑤	6.2	6.2	6.2	5.9
⑦	0	5.6	5.6	5.6
IC324 ⑤	6.2	6.2	6.2	5.9
IC326 ①	5.9	6.0	5.9	5.9
②	5.9	5.9	5.8	5.9
③	5.9	5.9	5.8	5.9
⑤	1.7	1.6	2.1	2.1
⑥	2.4	2.3	2.3	4.6
⑦	0	10.8	−0.1	0
⑧	6.3	6.3	6.2	5.9
⑨	6.3	6.3	6.2	5.9
⑩	6.3	6.2	6.2	5.9
⑫	6.2	6.2	6.2	5.9
⑬	6.2	6.2	6.2	5.9
⑭	6.2	6.2	6.2	5.9
IC327 ②	0	0	0	2.9
IC350 ①	6.6	6.4	6.1	6.9
②	6.2	6.2	6.0	6.4
③	6.2	6.2	6.0	6.4

	PAL	NTSC 3.58	S-VIDEO	ANALOG RGB
Q300 B	2.5	2.2	2.2	2.2
C	10.2	10.4	10.4	10.5
E	1.9	1.6	1.6	1.6
Q301 E	8.6	8.2	8.5	9.8
Q303 E	5.7	5.7	5.5	5.7
Q304 B	6.3	6.3	6.2	6.3
E	5.7	5.7	5.5	5.7
Q305 B	8.6	8.2	8.5	9.8
E	7.9	7.6	7.9	9.1
Q307 E	1.4	1.1	1.4	2.7
Q309 B	1.4	1.1	1.4	2.6
C	0.1	0.2	0.1	0
E	0.7	1.7	0	1.8
Q312 C	8.2	8.6	8.3	8.1
Q313 B	8.2	8.6	8.2	8.1
E	8.8	9.3	8.9	8.7
Q314 B	11.9	11.9	11.9	11.9
C	0	0	0	0
Q315 B	3.3	2.9	3.2	3.3
E	3.9	3.5	3.8	4.0
Q318 B	12.1	11.7	12.1	12.1
C	1.0	1.2	1.0	0.9
Q322 B	2.4	2.3	5.6	2.4
E	1.8	1.8	5.0	1.8
Q323 B	5.0	0	0	0
C	0	3.5	3.5	3.6
Q324 B	4.1	0	0	0
C	0	0.8	0.8	0.9
Q328 G	2.8	2.8	0	0
Q329 G	0	1.6	2.9	2.8
Q332 B	4.9	0	0	0
C	0	4.4	4.3	4.4
Q333 B	1.7	1.9	1.7	1.7
E	1.5	1.7	1.5	1.4
Q339 B	12.3	12.5	12.5	12.3
Q354 B	12.0	0	0	0
E	12.0	0	0	−0.2
Q358 E	2.2	0	2.2	2.2
Q360 1	6.2	6.2	6.1	6.4
3	6.2	6.2	6	6.4
5	1.3	2.2	5.3	3.8
Q361 B	4.9	5.0	5.0	0.8
C	0.1	0	0.1	2.9
Q362 C	9.0	9.0	9.2	8.5
Q364 C	3.3	2.9	2.8	2.9
Q365 B	0.4	0.3	0.4	0.4
Q369 B	0.8	0.8	0.9	4.9
Q372 B	0	0	0	4.9
C	11.7	11.8	11.7	0
Q374 B	10.4	10.1	10.7	6.4
C	0	0	6.2	6.7
E	6.4	6.3	6.1	6.7
Q375 B	10.7	10.7	10.7	5.9
C	0	0	6.3	6.4
E	6.2	6.2	6	6.4

A (2/3) BOARD

IC301	ACC OFF. GAIN-CONT. AMP	Q308	CLAMP-REF	Q355	258 TRIP SW	D306	SW
IC302	PAL-60-ID2	Q309	CLAMP-BUFF-2	Q356	MUTE SW	D307	B/W-SW
IC303	O/S H BLANK/SPLIT POSITION	Q310	PAL TRAP BUFFER 2	Q357	ACC OFF AMP	D308	SW
IC304	SYSTEM-SW	Q311	SLICER 2	Q358	ACC OFF SW	D309	B/W-SW
IC305	CHROMA-DEMOD	Q312	AMP-1	Q359	ACC ON SW	D310	CLAMP
IC306	G/Y-SW	Q313	AMP-2	Q360	HOLD	D311	XTAL ADJ
IC307	AFC SW	Q314	SECAA SW	Q361	EXT-SYNC SW	D313	SW
IC309	R/R-Y/SW	Q315	BUFF	Q362	OSD SW	D314	SLICER
IC310	BLACK-INSERT	Q316	NT-COMB-D.C.-REF	Q363	TEST BUFFER	D315	7.5 OPSW
IC311	SAMPLE	Q318	SYNC-SEF	Q364	V-PULSE SW	D317	LEVEL-SHIFT
IC312	B/B-Y-SW	Q319	Y-SW-BUFF	Q366	BRIGHT UP SW 1	D320	SLICE
IC313	SYNC SELECT	Q320	BUFFER	Q367	BRIGHT UP SW 2	D322	SLICE
IC314	Y-SW	Q321	B/W-SW 2	Q368	BRIGHT UP SW 3	D323	SW
IC315	PULSE SELECT	Q323	PAL SW	Q369	RGB SW	D324	R-Y COLOR BALANCE ADJ
IC316	SECAM CHROMA SELECT	Q324	PAL SW	Q372	RGB SW	D325	PULSE SW
IC317	H-PULSE-GATE	Q325	SYNC-SIG-BUFF	Q373	RGB MODE SW	D326	LIMITTER
IC318	NOT-GATE	Q326	Y-AMP-1	Q374	RGB MODE SW	D327	SW
IC319	SW	Q327	Y-AMP-2	Q375	RGB MODE SW	D332	RGB COMP SW
IC320	CHROMA BPF SELECT	Q328	443 SW	Q376	DIGITAL MODE SW 2	D333	H BLK SW
IC321	Y-D.L.-SW	Q329	358 SW	Q377	DIGITAL MODE SW 1	D337	SECAM-SW
IC322	G/Y SW SELECT	Q330	R-Y-BUFF 1	Q378	MUTE SW	D338	SW
IC323	B/B-Y SW SELECT	Q331	B-Y-BUFF 1	Q380	SPLIT SW	D339	LIMITTER
IC324	R/R-Y SW SELECT	Q332	358 SW	Q381	SPLIT SW	D341	D. C. SHIFT
IC325	AUDIO SELECT	Q333	SYNC-BUFF	Q382	OVER SCAN SW	D344	SW
IC326	HOLD AMP	Q335	HV-DL SW	Q383	OVER SCAN SW	D345	OSD G CLAMP
IC327	SYNC SW	Q338	V-SYNC SSP 1	Q384	OVER SCAN SW	D346	OSD B CLAMP
IC350	BUFFER AMP	Q339	V-SYNC SSP 2	Q385	SPLIT SW	D347	OSD R CLAMP
		Q341	G/Y BUFFER	Q386	SPLIT SYNC SW	D360	SW
		Q342	R/R-Y BUFFER			D361	SW
Q300	PHASE SHIFT	Q343	B/B-Y BUFFER			D362	D. C. SHIFT
Q301	SYNC-SHIP CLAMP 1	Q345	MUTE SW	D300	PHASE ADJ	D363	D. C. SHIFT
Q302	BUFFER	Q350	INSERT-PULSE SW	D301	SW	D364	SW
Q303	VIDEO-IN-BUFF-1	Q351	G/Y-BUFF-2	D302	D. C. SHIFT	D365	SECAM SW
Q305	CLAMP-BUFF-1	Q352	R/R-Y-BUFF-2	D303	SECAM SW	D381	SW
Q306	PAL TRAP BUFFER 1	Q353	B/B-Y-BUFF-2	D304	SW		
Q307	SYNC-CHIP-CLAMP 2	Q354	B/W-SW2	D305	PROTECT		

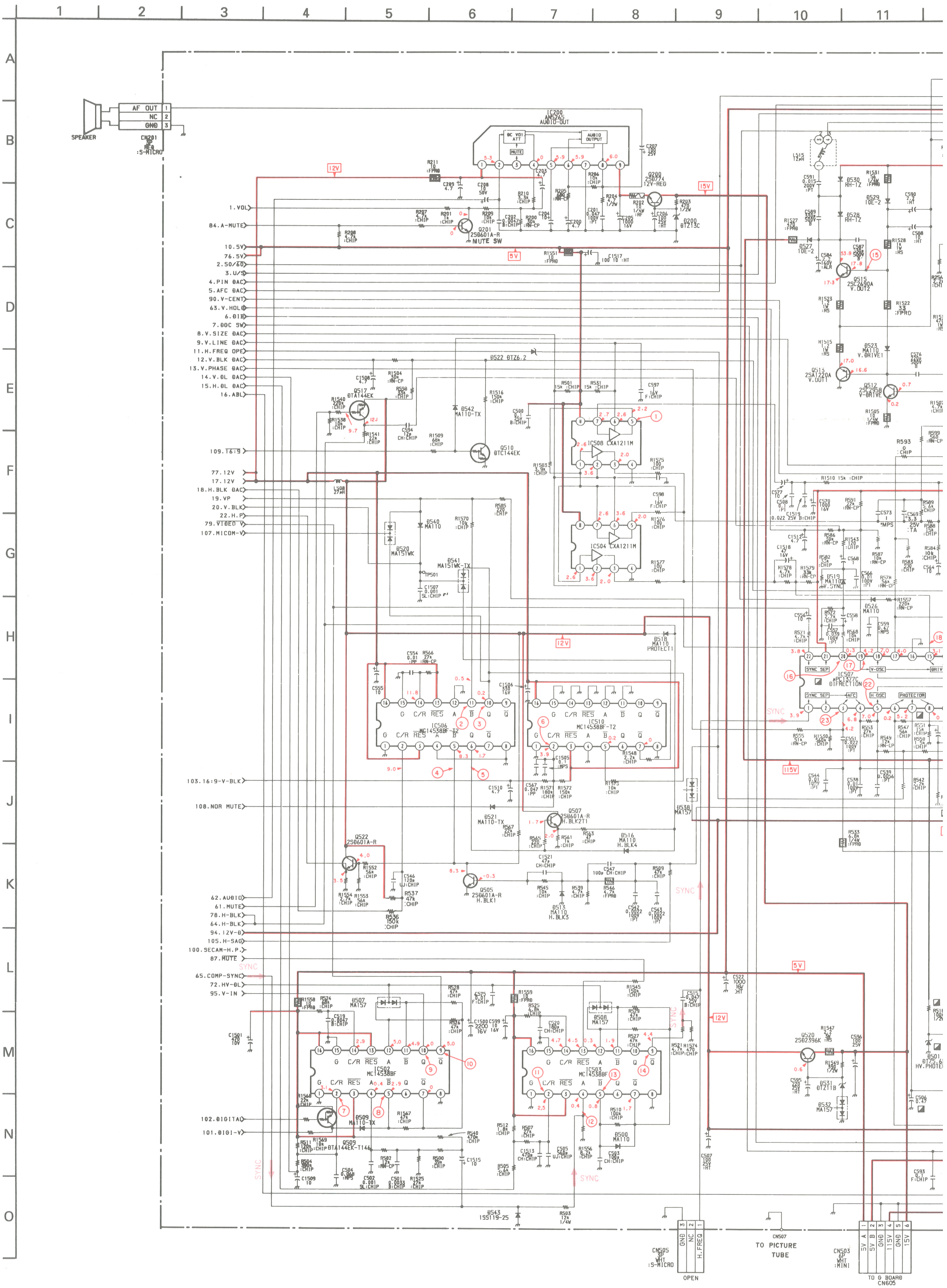
SPEAKER
AF OUT
NC
GND
CN201
:S-MICRO
IC200
AN5265
AUDIO-OUT
12V
15V
5V
1.VOL
84.A-MUTE
10.5V
76.5V
2.50/60
3.U/S
4.PIN DAC
5.AFC DAC
90.V-CENT
63.V.HOLD
6.DIB
7.DGC SW
8.V.SIZE DAC
9.V.LINE DAC
11.H.FREQ OPE
12.V.BLK DAC
13.V.PHASE DAC
14.V.DL DAC
15.H.DL DAC
16.ABL
109.16:9
77.12V
17.12V
18.H.BLK DAC
19.VP
20.V.BLK
22.H.P
79.VIDEO V
107.MICOM-V
Q201
2SD601A-R
MUTE SW
D522 DTZ6.2
Q517
DTA144EK
D542
MA110-TX
Q510
DTC144EK
IC508 CXA1211M
IC504 CXA1211M
D540
MA110
D520
MA151WK
D541
MA151WK-TX
D518
MA110
PROTECT
IC506
MC14538BF-T2
IC510
MC14538BF-T2
103.16:9-V-BLK
108.NOR MUTE
D521
MA110-TX
Q507
2SD601A-R
H.BLK2
D538
MA157
D516
MA110
H.BLK4
Q522
2SD601A-R
Q505
2SD601A-R
H.BLK1
D513
MA110
H.BLK3
62.AUDIO
61.MUTE
78.H-BLK
64.H-BLK
94.12V-D
105.H-SAG
100.SECAM-H.P.
87.MUTE
65.COMP-SYNC
72.HV-DL
95.V-IN
D507
MA157
IC502
MC14538BF
IC503
MC14538BF
102.DIGITAL
101.DIGI-V
Q509
DTA144EK-T146
D509
MA110-TX
D543
1SS119-25
D550A
MA157
Q520
2SD2396K
D531
DTZ11B
D532
MA157
D519
MA110
V.SYNC
D526
MA110
IC507
μPC1377C
DIFFRECTION
SYNC SEP
V-OSC
H.OSC
AFC
PROTECTOR
D515
2SC2690A
V.OUT2
D523
MA110
V.DRIVE1
Q513
2SA1220A
V.OUT
Q512
2SC2058
V-DRIVE
D530
RH-1Z
D529
10E-2
D528
RH-1Z
D527
10E-2
L515
12μH
CN505
3P
WHT
:S-MICRO
OPEN
CN507
TO PICTURE
TUBE
CN503
6P
WHT
:MINI
5V A
5V B
GND
115V
GND
15V
TO G BOARD
CN605

DY

H.ΘY | H.ΘY V.ΘY | V.ΘY

CN501 6P WHT :MINI

1	H+
2	H+
3	H−
4	H−
5	V−
6	V+

CN502 6P WHT :MINI

6	H2
5	H1
4	NC
3	GNΘ
2	180V
1	G2

TO C BOARD CN702

HV — TO PICTURE TUBE HV

FOCUS — TO C BOARD FV

CN605 TO G BOARΘ: 5V A, 5V B, GNΘ, 115V, GNΘ, 15V

CN606 TO G BOARΘ: −15V, 7V, GNΘ, H.PULSE, ΘGC SW

CN504 5P WHT :S-MICRO: −15V, 7V, GNΘ, 12V, 5V

CN304 6P WHT :S-MICRO: 7V, −15V, GNΘ, 12V, 5V, ΘIB

OPEN

A (3/3) H/V OUT, ΘEFLECTION SYSTEM, AUΘIO OUT.

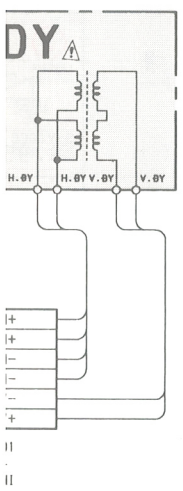

A (3/3) BOARD WAVEFORMS

① 1.0 Vp-p (V)	② 11.0 Vp-p (V)	③ 12.0 Vp-p (V)
④ 11.0 Vp-p (H)	⑤ 12.0 Vp-p (H)	⑥ 6.3 Vp-p (V)
⑦ 3.9 Vp-p (V)	⑧ 4.8 Vp-p (V)	⑨ 4.8 Vp-p (V)
⑩ 4.8 Vp-p (V)	⑪ 4.0 Vp-p (H)	⑫ 5.3 Vp-p (H)
⑬ 4.2 Vp-p (H)	⑭ 4.8 Vp-p (H)	⑮ 120 Vp-p (V)
⑯ 11.0 Vp-p (V)	⑰ 3.8 Vp-p (V)	⑱ 1.5 Vp-p (V)
⑲ 5.9 Vp-p (V)	⑳ 11.2 Vp-p (V)	㉑ 5.0 Vp-p (H)
㉒ 4.8 Vp-p (H)	㉓ 2.6 Vp-p (H)	㉔ 3.8 Vp-p (H)
㉕ 170 Vp-p (H)	㉖ 14.4 Vp-p (H)	㉗ 1000 Vp-p (H)
㉘ 2.4 Vp-p (V)	㉙ 305 Vp-p (H)	

A (3/3) BOARD

IC200	AUDIO OUT
IC500	X-RAY PROTECT
IC502	V DELAY MONO-MULTI
IC503	H DELAY MONO-MULTI
IC504	V GAIN-CONT AMP 2
IC505	+12V REG
IC506	H BLK MONO-MULTI
IC507	DEFLECTION
IC508	V GAIN-CONT AMP 1
IC509	PIN COMPLETION
IC510	16:9 V BLK MONO-MULTI
Q200	+12 REG
Q201	MUTE SW
Q500	CURR LIM 2
Q501	H OUT
Q502	H DRIVE
Q503	PIN OUT
Q505	H BLK 1
Q506	V ZOOMING
Q507	H BLK BUFFER
Q508	50/60 SWITCH
Q509	DIGITAL V SWITCH
Q510	16:9 SWITCH
Q511	CURR LIM 1
Q512	V DRIVE
Q513	V OUT 1
Q514	50/60 SWITCH
Q515	V OUT 2
Q517	H-V PHASE LOCK SW
Q518	U/S SWITCH 1
Q519	U/S SWITCH 2
Q520	+12V REG
Q522	H PULSE BUFFER
Q523	V CENT CONT
Q524	V CENT OUT 2
Q525	V CENT OUT 1
Q526	FBT +12V FAILURE SW
Q527	FAILURE
D116	CURR LIMITER
D200	AUDIO DC SHIFT
D500	SPEED UP
D501	HV PROTECT
D502	PIN DAMPER
D503	PROTECT
D504	PROTECT
D505	G2 RECT
D506	DAMPER
D507	HV DELAY SWITCH
D508	HV DELAY SWITCH
D509	SWITCH
D510	+15V RECT
D512	PIN DAMPER 2
D513	H BLK
D514	+24V RECT
D515	+170V RECT
D516	H BLK
D517	SWITCH
D518	PROTECT
D519	V SYNC
D520	MICOM SWITCH
D521	MUTE SWITCH
D522	DC UP
D523	BIAS
D524	H CENT
D525	H CENT
D526	50/60 SWITCH
D527	DC LIMITER
D528	PUMP-UP 2
D529	SWITCH
D530	PUMP-UP
D531	+12V REF 1
D532	+12V REF 2
D533	HV PROTECT RECT
D534	SWITCH
D535	BIAS
D536	BIAS
D537	PROTECT
D538	PROTECT
D539	SWITCH
D540	V BLK SWITCH 1
D541	V BLK SWITCH 2
D542	16:9 SWITCH

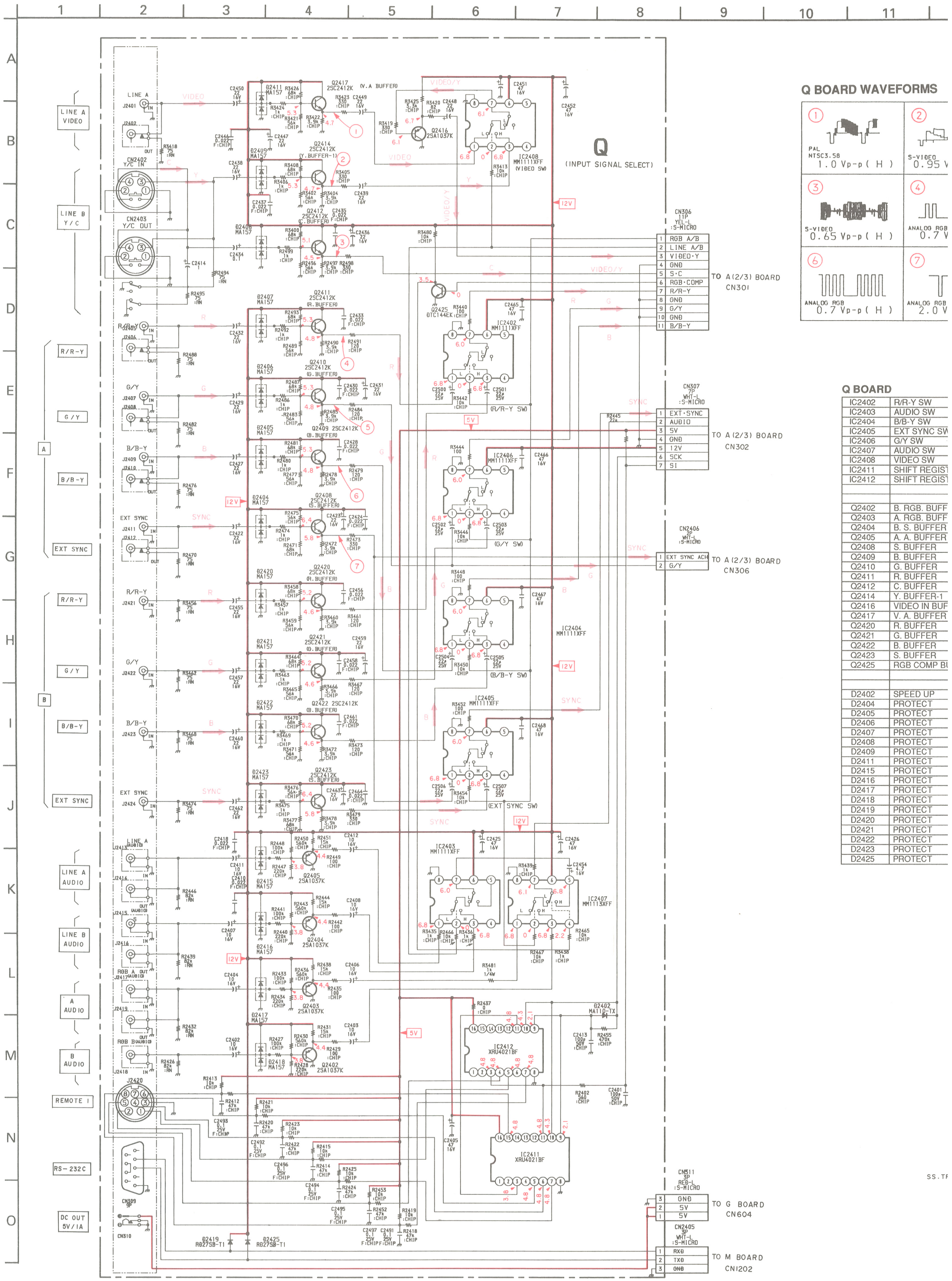

Q BOARD WAVEFORMS

① PAL NTSC3.58 1.0 Vp-p (H)		② S-VIDEO 0.95 V	
③ S-VIDEO 0.65 Vp-p (H)		④ ANALOG RGB 0.7 V	
⑥ ANALOG RGB 0.7 Vp-p (H)		⑦ ANALOG RGB 2.0 V	

Q BOARD

IC2402	R/R-Y SW
IC2403	AUDIO SW
IC2404	B/B-Y SW
IC2405	EXT SYNC SW
IC2406	G/Y SW
IC2407	AUDIO SW
IC2408	VIDEO SW
IC2411	SHIFT REGIST
IC2412	SHIFT REGIST
Q2402	B. RGB. BUFF
Q2403	A. RGB. BUFF
Q2404	B. S. BUFFER
Q2405	A. A. BUFFER
Q2408	S. BUFFER
Q2409	B. BUFFER
Q2410	G. BUFFER
Q2411	R. BUFFER
Q2412	C. BUFFER
Q2414	Y. BUFFER-1
Q2416	VIDEO IN BUF
Q2417	V. A. BUFFER
Q2420	R. BUFFER
Q2421	G. BUFFER
Q2422	B. BUFFER
Q2423	S. BUFFER
Q2425	RGB COMP BU
D2402	SPEED UP
D2404	PROTECT
D2405	PROTECT
D2406	PROTECT
D2407	PROTECT
D2408	PROTECT
D2409	PROTECT
D2411	PROTECT
D2415	PROTECT
D2416	PROTECT
D2417	PROTECT
D2418	PROTECT
D2419	PROTECT
D2420	PROTECT
D2421	PROTECT
D2422	PROTECT
D2423	PROTECT
D2425	PROTECT

EFORMS

)	② S-VIDEO 0.95 Vp-p (H)	
)	④ ANALOG RGB 0.7 Vp-p (H)	⑤ ANALOG RGB 0.7 Vp-p (H)
)	⑦ ANALOG RGB 2.0 Vp-p (H)	

)

R/R-Y SW
AUDIO SW
B/B-Y SW
EXT SYNC SW
G/Y SW
AUDIO SW
VIDEO SW
SHIFT REGISTER
SHIFT REGISTER
B. RGB. BUFFER
A. RGB. BUFFER
B. S. BUFFER
A. A. BUFFER
S. BUFFER
B. BUFFER
G. BUFFER
R. BUFFER
C. BUFFER
Y. BUFFER-1
VIDEO IN BUFFER
V. A. BUFFER
R. BUFFER
G. BUFFER
B. BUFFER
S. BUFFER
RGB COMP BUFFER
SPEED UP
PROTECT
PROTECT
PROTECT
PROTECT
PROTECT
PROTECT
PROTECT
PROTECT
PROTECT
PROTECT
PROTECT
PROTECT
PROTECT
PROTECT
PROTECT
PROTECT
PROTECT
PROTECT

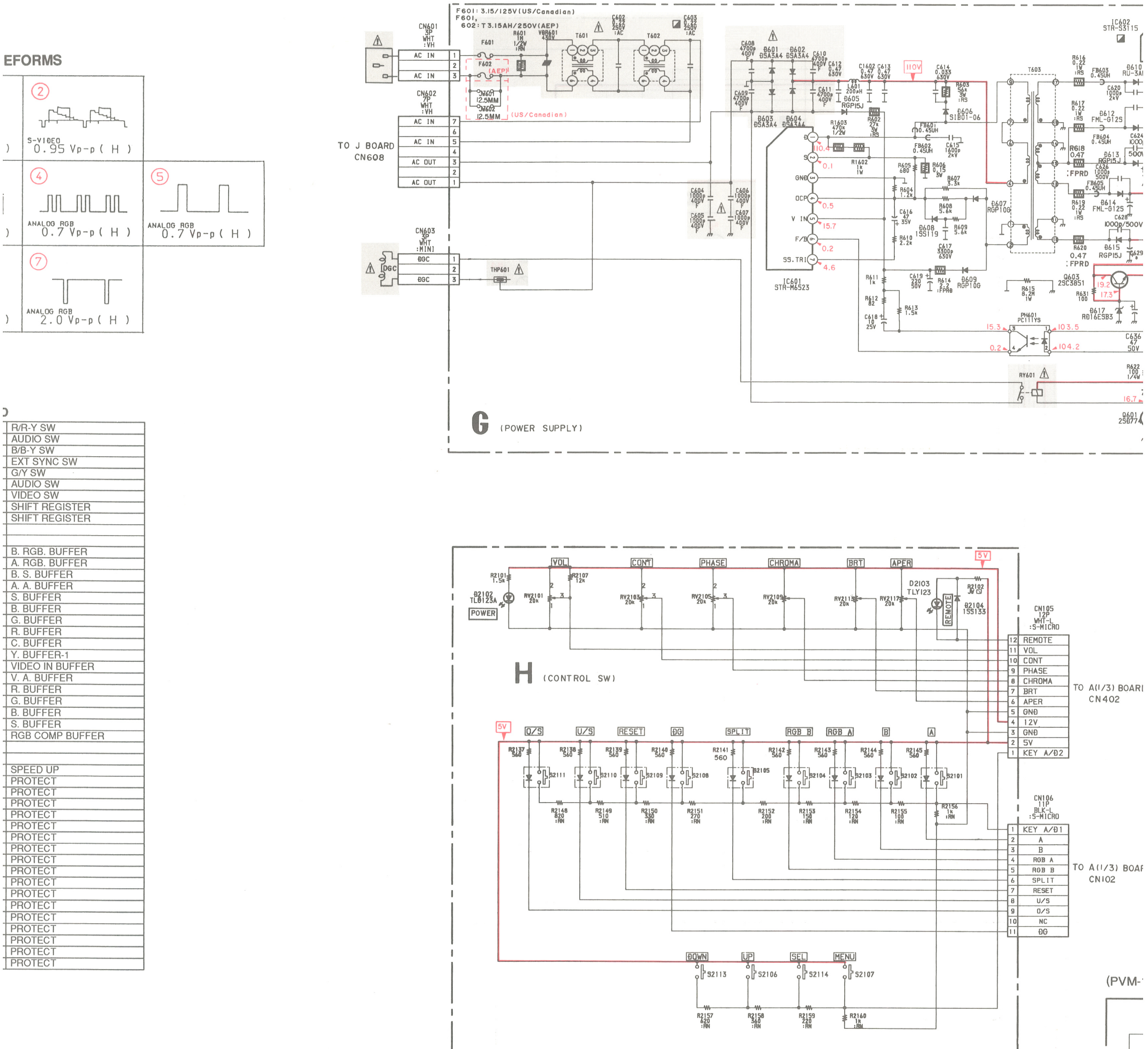

G BOARD IC601 STR-M6523

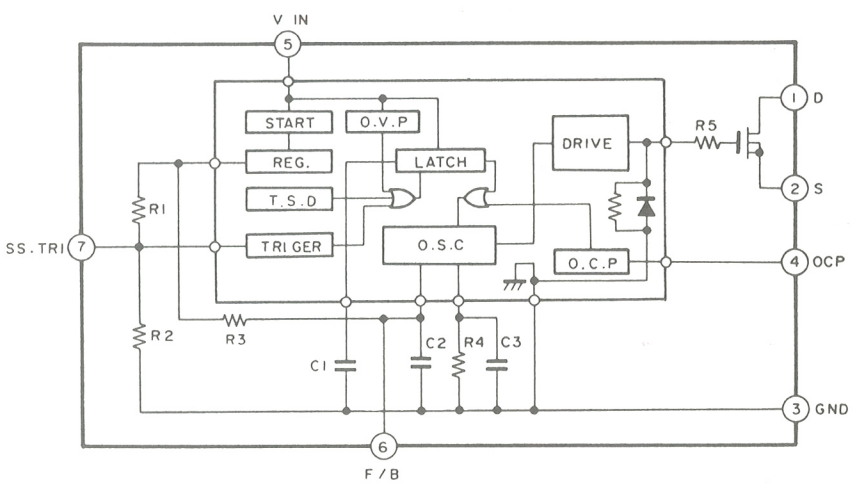

G BOARD IC602 STR-S3115

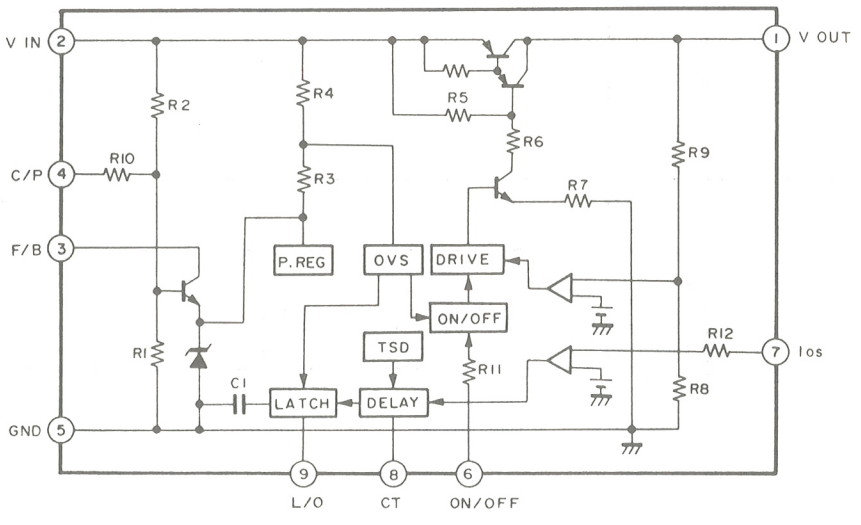

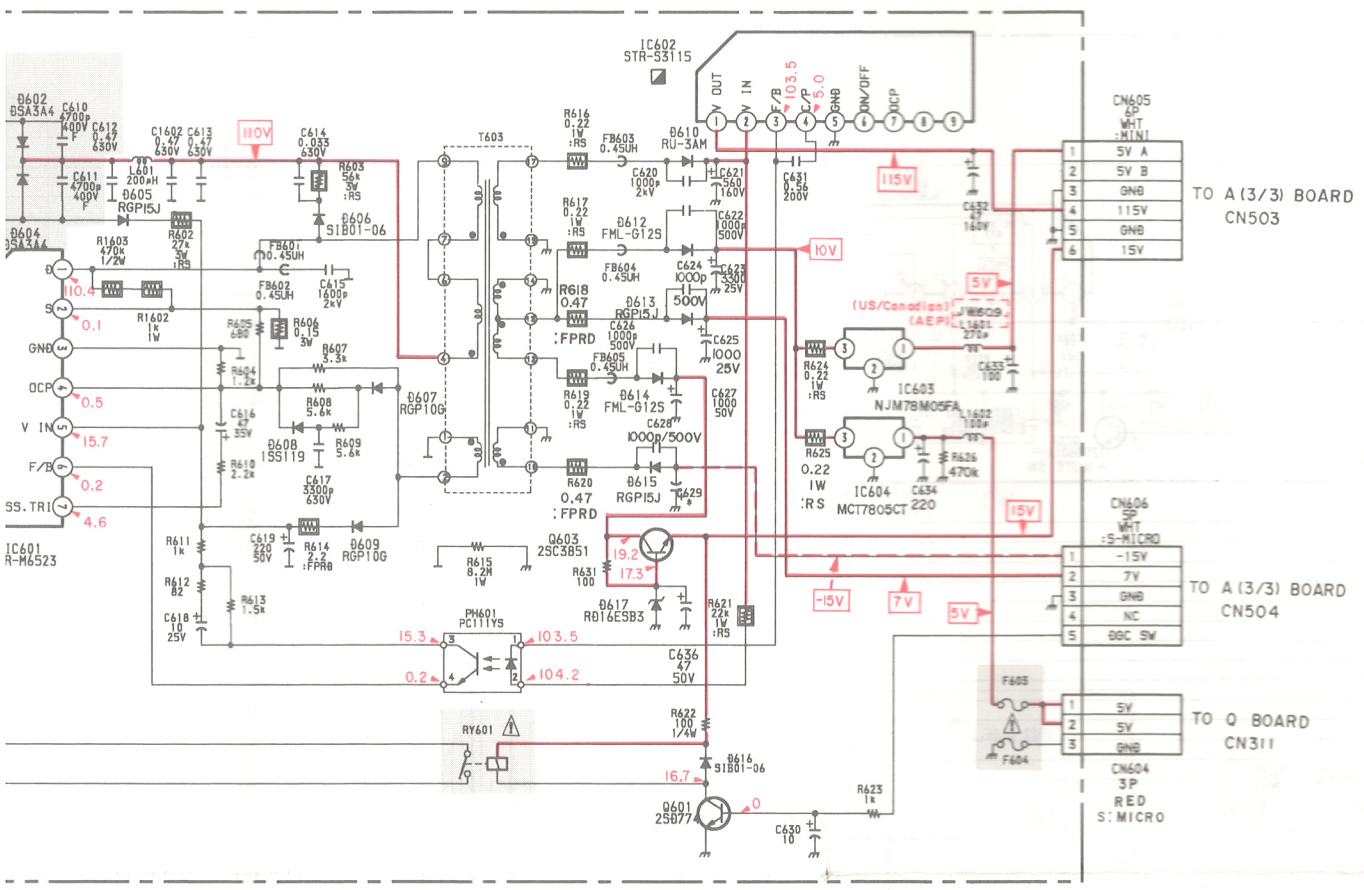

G BOARD

IC601	REF PWM
IC602	+B CONTROL
IC603	+5V A REG
IC604	+5V B REG
Q601	RELAY DRIVE
Q603	+15V REG
D601	MAIN RECT
D602	MAIN RECT
D603	MAIN RECT
D604	MAIN RECT
D605	OVP
D606	PROTECT
D607	SWITCH
D608	SWITCH
D609	SWITCH
D610	+B RECT
D612	+12V RECT
D613	+7V RECT
D614	+15V RECT
D615	–15V RECT
D616	PROTECT
D617	REF VOLTEGE

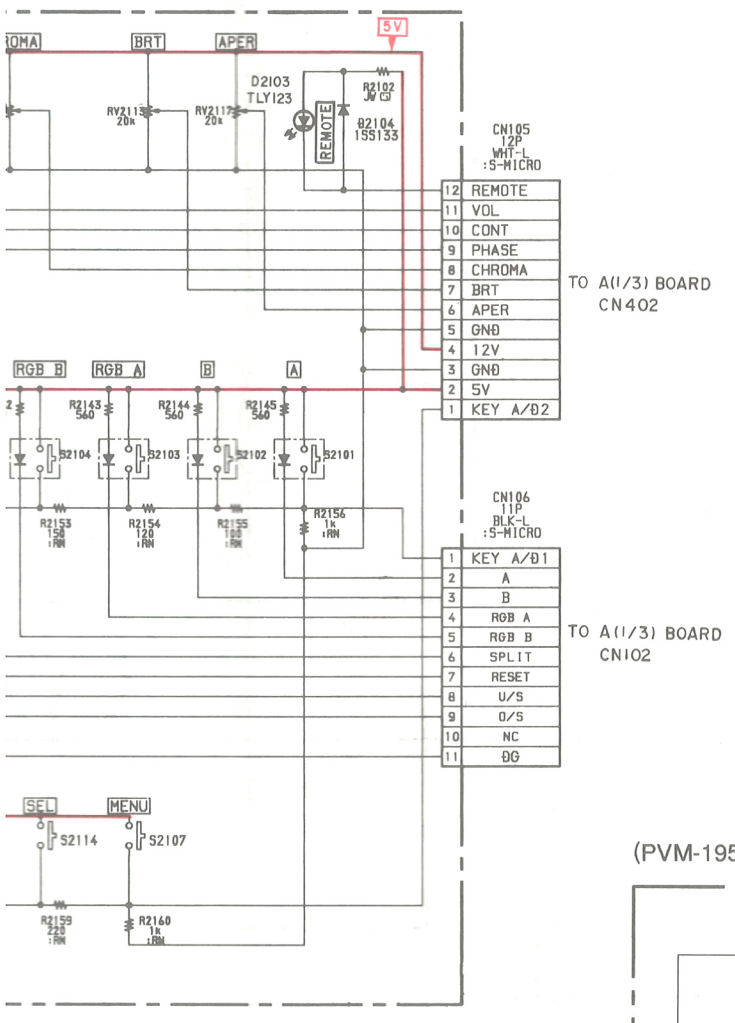

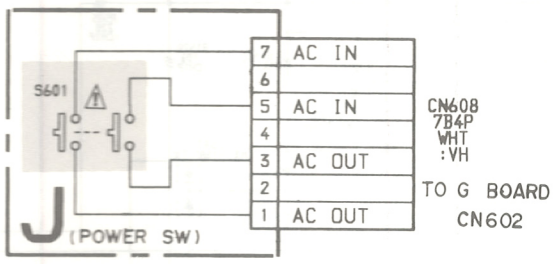

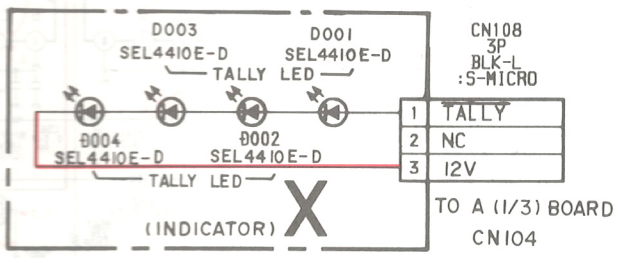

X BOARD

D001	TALLY LED 1
D002	TALLY LED 2
D003	TALLY LED 3
D004	TALLY LED 4

(PVM-1953MD ONLY)

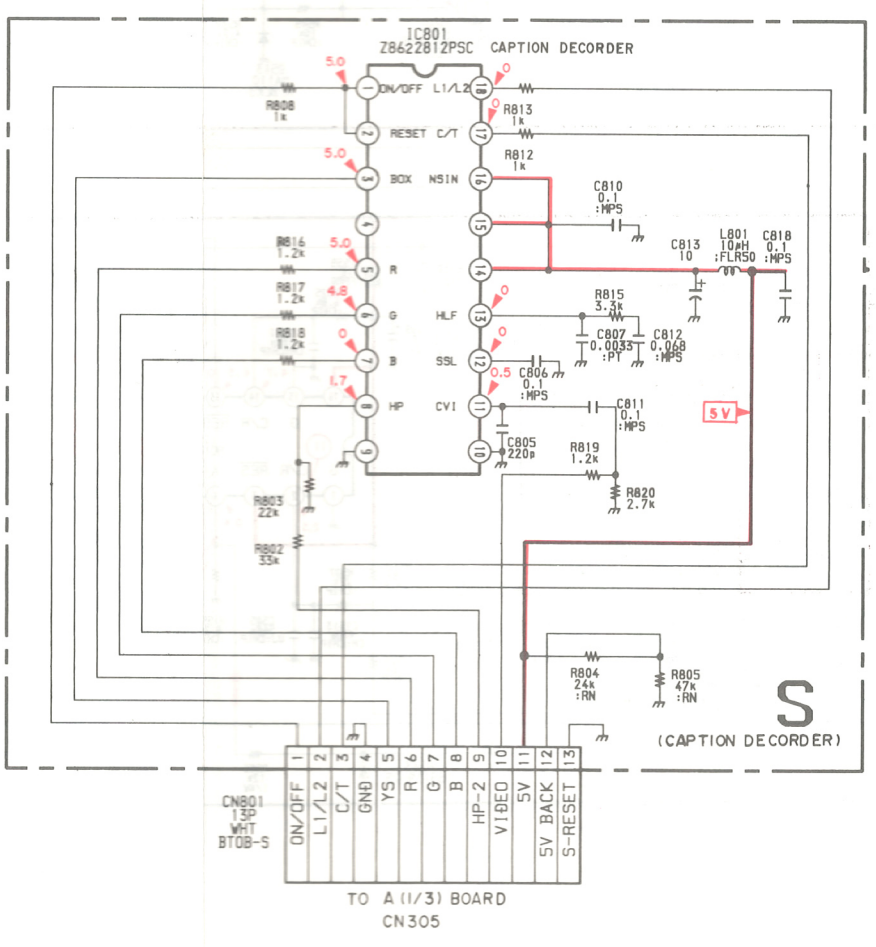

S BOARD

IC801	CAPTION DECODER

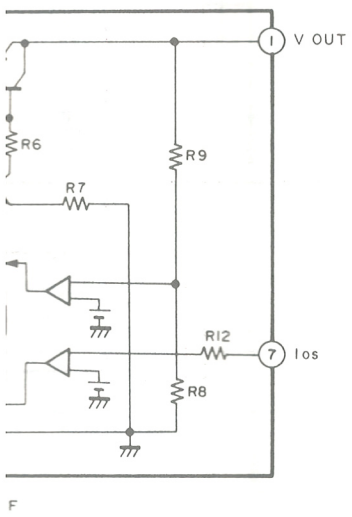

G [POWER SUPPLY] Q [INPUT SIGNAL SELECT] H [CONTROL SWITCH] S [CAPTION DECORDER] X [INDICATOR] J [POWER SWITCH]

– G BOARD –

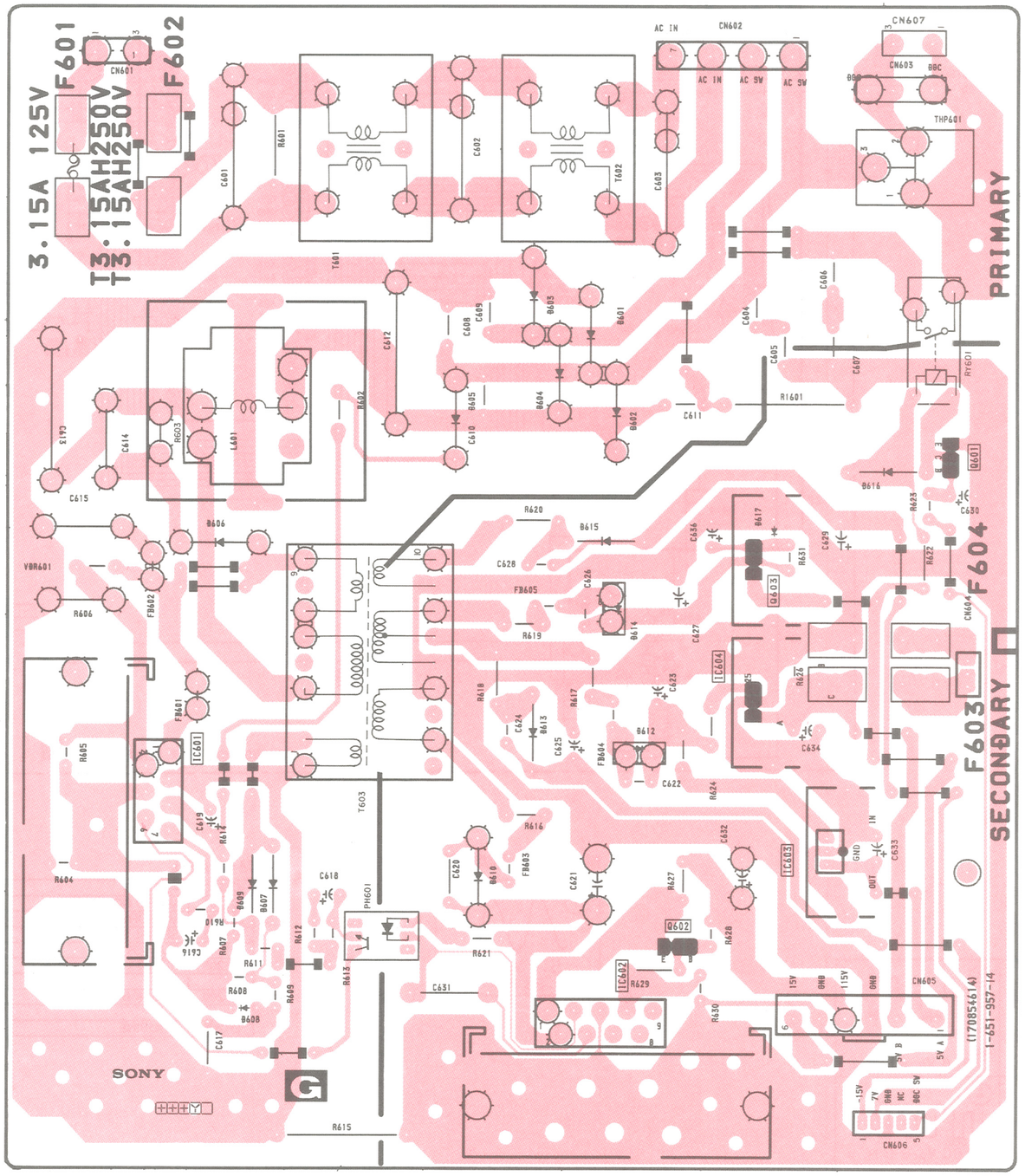

– Q BOARD –

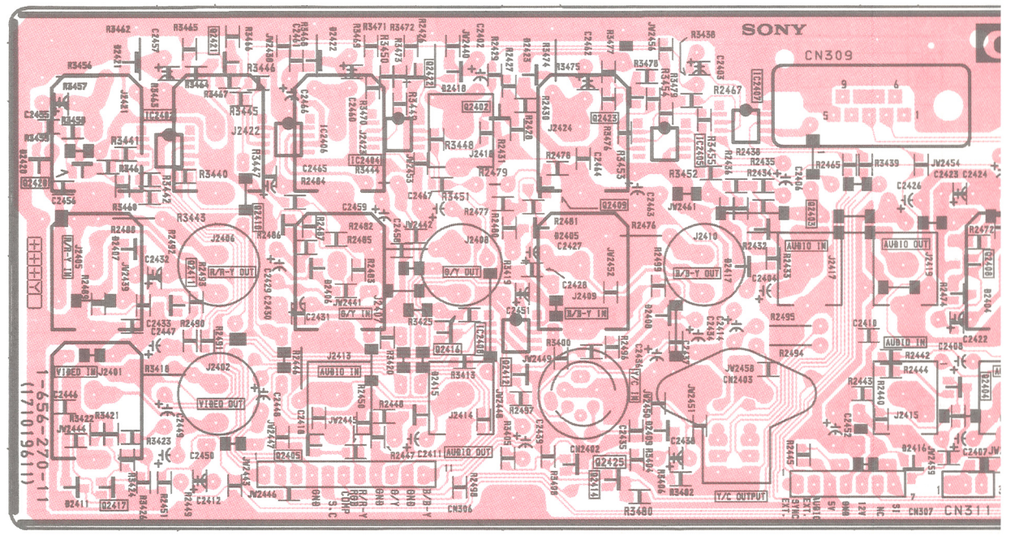

– H BOARD –

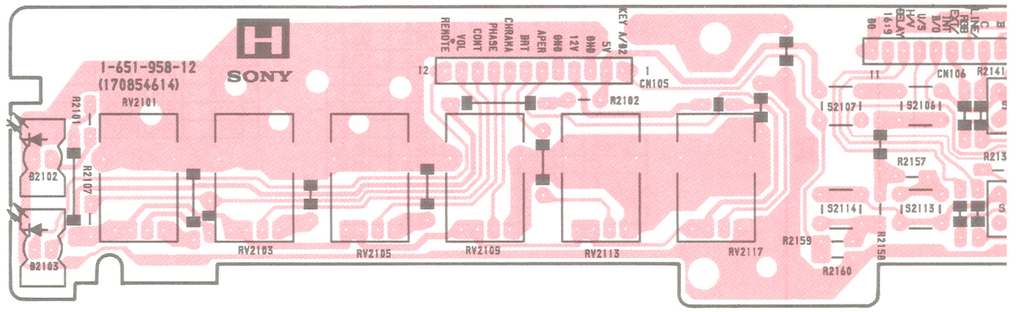

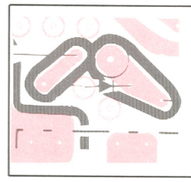

NOTE:
The circuit ind
600 Vp-p. Care
inspection or re

CONTROL SWITCH] **S** [CAPTION DECORDER] **X** [INDICATOR] **J** [POWER SWITCH]

– Q BOARD –

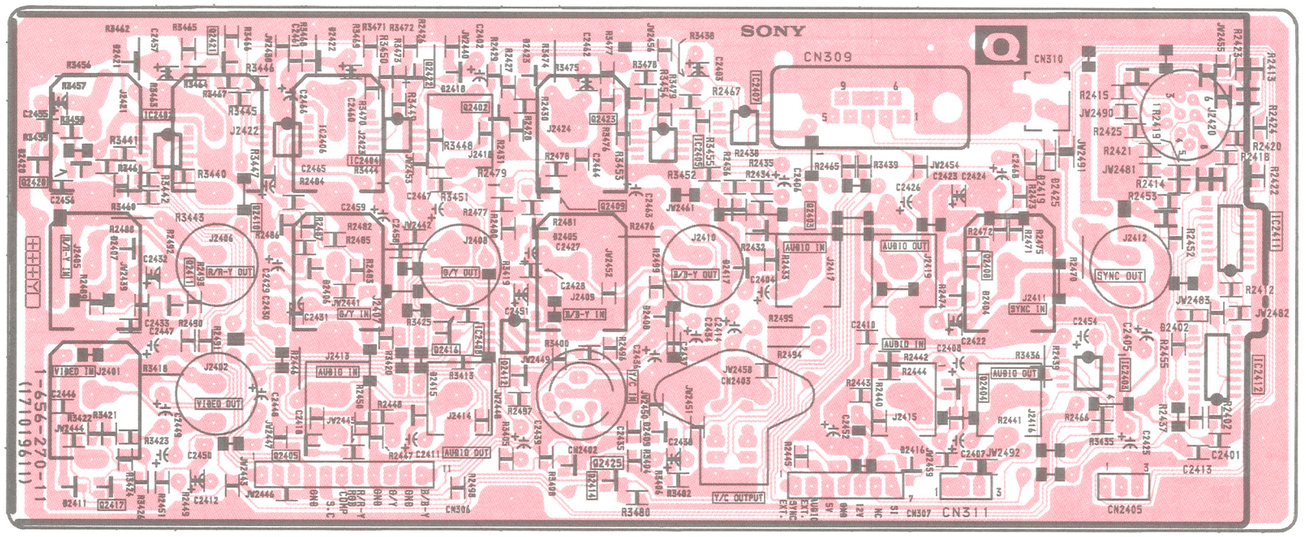

– X BOARD –

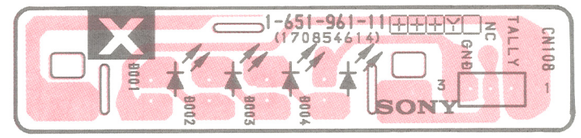

(PVM-1953MD ONLY)

– S BOARD –

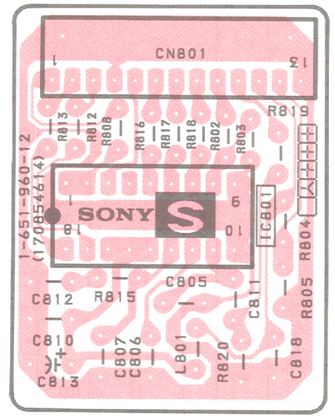

– H BOARD –

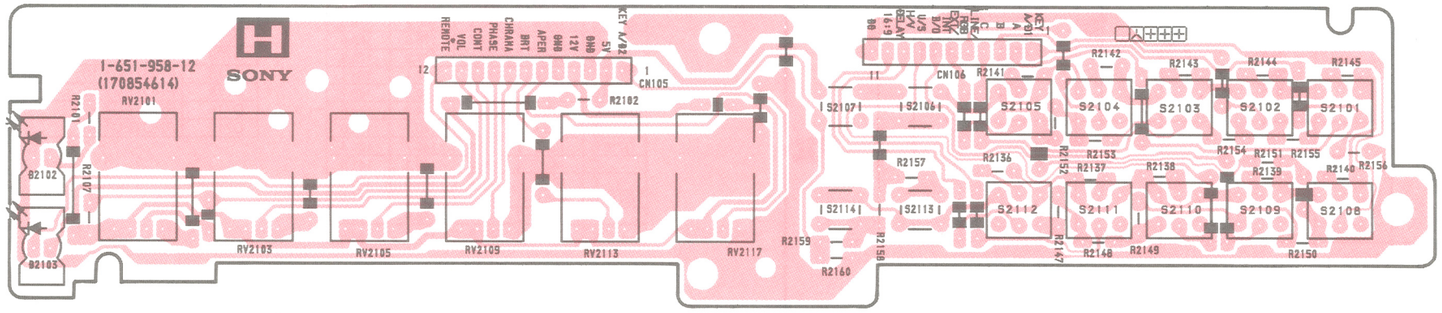

– J BOARD –

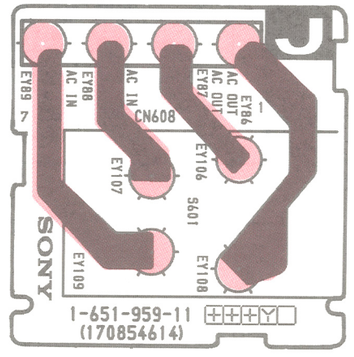

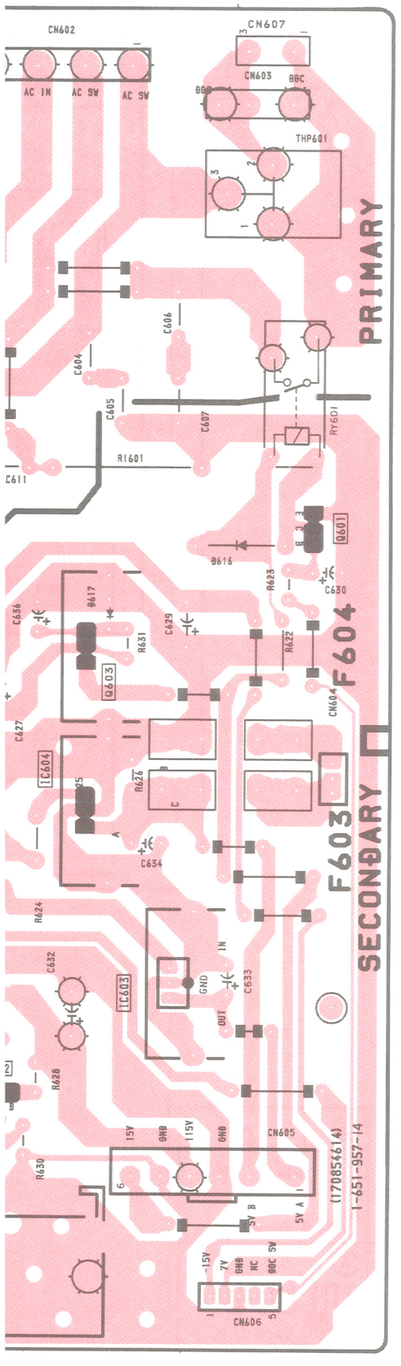

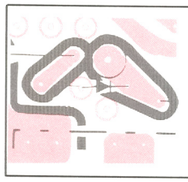

NOTE:
The circuit indicated as left contains high voltage of over 600 Vp-p. Care must be paid to prevent an electric shock in inspection or repairing.

Schematic diagrams
C , M boards ➡

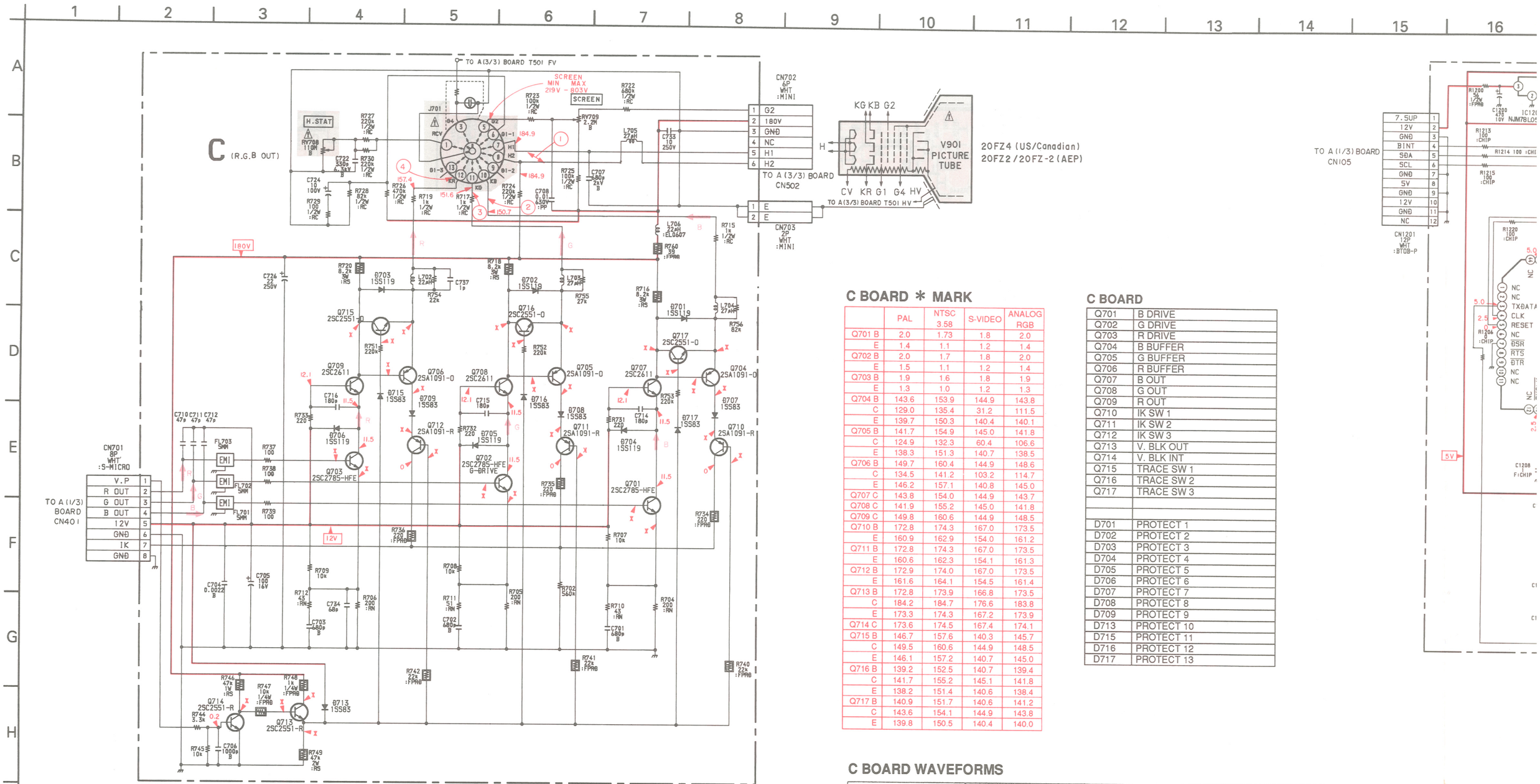

C BOARD * MARK

	PAL	NTSC 3.58	S-VIDEO	ANALOG RGB
Q701 B	2.0	1.73	1.8	2.0
E	1.4	1.1	1.2	1.4
Q702 B	2.0	1.7	1.8	2.0
E	1.5	1.1	1.2	1.4
Q703 B	1.9	1.6	1.8	1.9
E	1.3	1.0	1.2	1.3
Q704 B	143.6	153.9	144.9	143.8
C	129.0	135.4	31.2	111.5
E	139.7	150.3	140.4	140.1
Q705 B	141.7	154.9	145.0	141.8
C	124.9	132.3	60.4	106.6
E	138.3	151.3	140.7	138.5
Q706 B	149.7	160.4	144.9	148.6
C	134.5	141.2	103.2	114.7
E	146.2	157.1	140.8	145.0
Q707 C	143.8	154.0	144.9	143.7
Q708 C	141.9	155.2	145.0	141.8
Q709 C	149.8	160.6	144.9	148.5
Q710 B	172.8	174.3	167.0	173.5
E	160.9	162.9	154.0	161.2
Q711 B	172.8	174.3	167.0	173.5
E	160.6	162.3	154.1	161.3
Q712 B	172.9	174.0	167.0	173.5
E	161.6	164.1	154.5	161.4
Q713 B	172.8	173.9	166.8	173.5
C	184.2	184.7	176.6	183.8
E	173.3	174.3	167.2	173.9
Q714 C	173.6	174.5	167.4	174.1
Q715 B	146.7	157.6	140.3	145.7
C	149.5	160.6	144.9	148.5
E	146.1	157.2	140.7	145.0
Q716 B	139.2	152.5	140.7	139.4
C	141.7	155.2	145.1	141.8
E	138.2	151.4	140.6	138.4
Q717 B	140.9	151.7	140.6	141.2
C	143.6	154.1	144.9	143.8
E	139.8	150.5	140.4	140.0

C BOARD

Q701	B DRIVE
Q702	G DRIVE
Q703	R DRIVE
Q704	B BUFFER
Q705	G BUFFER
Q706	R BUFFER
Q707	B OUT
Q708	G OUT
Q709	R OUT
Q710	IK SW 1
Q711	IK SW 2
Q712	IK SW 3
Q713	V. BLK OUT
Q714	V. BLK INT
Q715	TRACE SW 1
Q716	TRACE SW 2
Q717	TRACE SW 3
D701	PROTECT 1
D702	PROTECT 2
D703	PROTECT 3
D704	PROTECT 4
D705	PROTECT 5
D706	PROTECT 6
D707	PROTECT 7
D708	PROTECT 8
D709	PROTECT 9
D713	PROTECT 10
D715	PROTECT 11
D716	PROTECT 12
D717	PROTECT 13

C BOARD WAVEFORMS

① 25.0 Vp-p (H)	② PAL 70.0 Vp-p (H)	② NTSC3.58 63.0 Vp-p (H)	② S-VIDEO 78.0 Vp-p (H) ANALOG RGB 80.0 Vp-p (H)	③ PAL 78.0 Vp-p (H)
③ NTSC3.58 70.0 Vp-p (H)	③ S-VIDEO 88.0 Vp-p (H) ANALOG RGB 90.0 Vp-p (H)	④ PAL 89.0 Vp-p (H)	④ NTSC3.58 82.0 Vp-p (H)	④ S-VIDEO 100 Vp-p (H) ANALOG RGB 102 Vp-p (H)

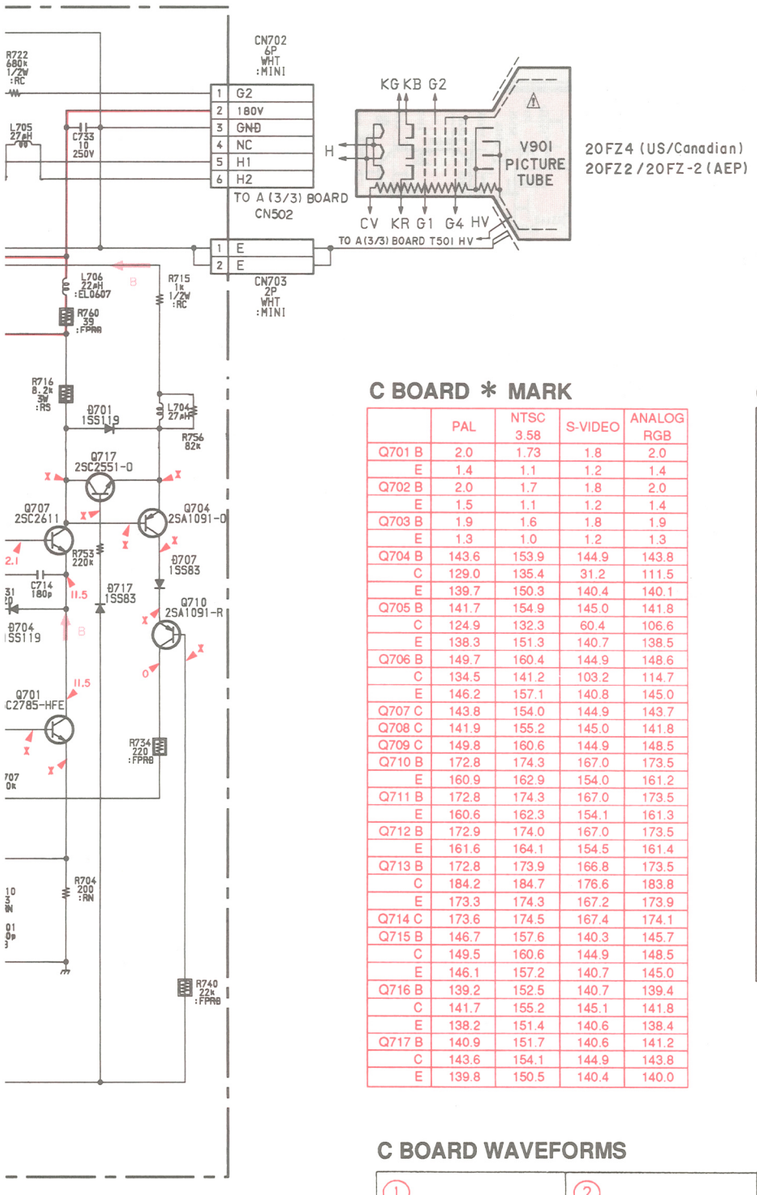

C BOARD * MARK

	PAL	NTSC 3.58	S-VIDEO	ANALOG RGB
Q701 B	2.0	1.73	1.8	2.0
E	1.4	1.1	1.2	1.4
Q702 B	2.0	1.7	1.8	2.0
E	1.5	1.1	1.2	1.4
Q703 B	1.9	1.6	1.8	1.9
E	1.3	1.0	1.2	1.3
Q704 B	143.6	153.9	144.9	143.8
C	129.0	135.4	31.2	111.5
E	139.7	150.3	140.4	140.1
Q705 B	141.7	154.9	145.0	141.8
C	124.9	132.3	60.4	106.6
E	138.3	151.3	140.7	138.5
Q706 B	149.7	160.4	144.9	148.6
C	134.5	141.2	103.2	114.7
E	146.2	157.1	140.8	145.0
Q707 C	143.8	154.0	144.9	143.7
Q708 C	141.9	155.2	145.0	141.8
Q709 C	149.8	160.6	144.9	148.5
Q710 B	172.8	174.3	167.0	173.5
E	160.9	162.9	154.0	161.2
Q711 B	172.8	174.3	167.0	173.5
E	160.6	162.3	154.1	161.3
Q712 B	172.9	174.0	167.0	173.5
E	161.6	164.1	154.5	161.4
Q713 B	172.8	173.9	166.8	173.5
C	184.2	184.7	176.6	183.8
E	173.3	174.3	167.2	173.9
Q714 C	173.6	174.5	167.4	174.1
Q715 B	146.7	157.6	140.3	145.7
C	149.5	160.6	144.9	148.5
E	146.1	157.2	140.7	145.0
Q716 B	139.2	152.5	140.7	139.4
C	141.7	155.2	145.1	141.8
E	138.2	151.4	140.6	138.4
Q717 B	140.9	151.7	140.6	141.2
C	143.6	154.1	144.9	143.8
E	139.8	150.5	140.4	140.0

C BOARD

Q701	B DRIVE
Q702	G DRIVE
Q703	R DRIVE
Q704	B BUFFER
Q705	G BUFFER
Q706	R BUFFER
Q707	B OUT
Q708	G OUT
Q709	R OUT
Q710	IK SW 1
Q711	IK SW 2
Q712	IK SW 3
Q713	V. BLK OUT
Q714	V. BLK INT
Q715	TRACE SW 1
Q716	TRACE SW 2
Q717	TRACE SW 3
D701	PROTECT 1
D702	PROTECT 2
D703	PROTECT 3
D704	PROTECT 4
D705	PROTECT 5
D706	PROTECT 6
D707	PROTECT 7
D708	PROTECT 8
D709	PROTECT 9
D713	PROTECT 10
D715	PROTECT 11
D716	PROTECT 12
D717	PROTECT 13

C BOARD WAVEFORMS

① 25.0 Vp-p (H)	② PAL 70.0 Vp-p (H)	② NTSC3.58 63.0 Vp-p (H)	② S-VIDEO 78.0 Vp-p (H) ANALOG RGB 80.0 Vp-p (H)	③ PAL 78.0 Vp-p (H)
③ NTSC3.58 70.0 Vp-p (H)	③ S-VIDEO 88.0 Vp-p (H) ANALOG RGB 90.0 Vp-p (H)	④ PAL 89.0 Vp-p (H)	④ NTSC3.58 82.0 Vp-p (H)	④ S-VIDEO 100 Vp-p (H) ANALOG RGB 102 Vp-p (H)

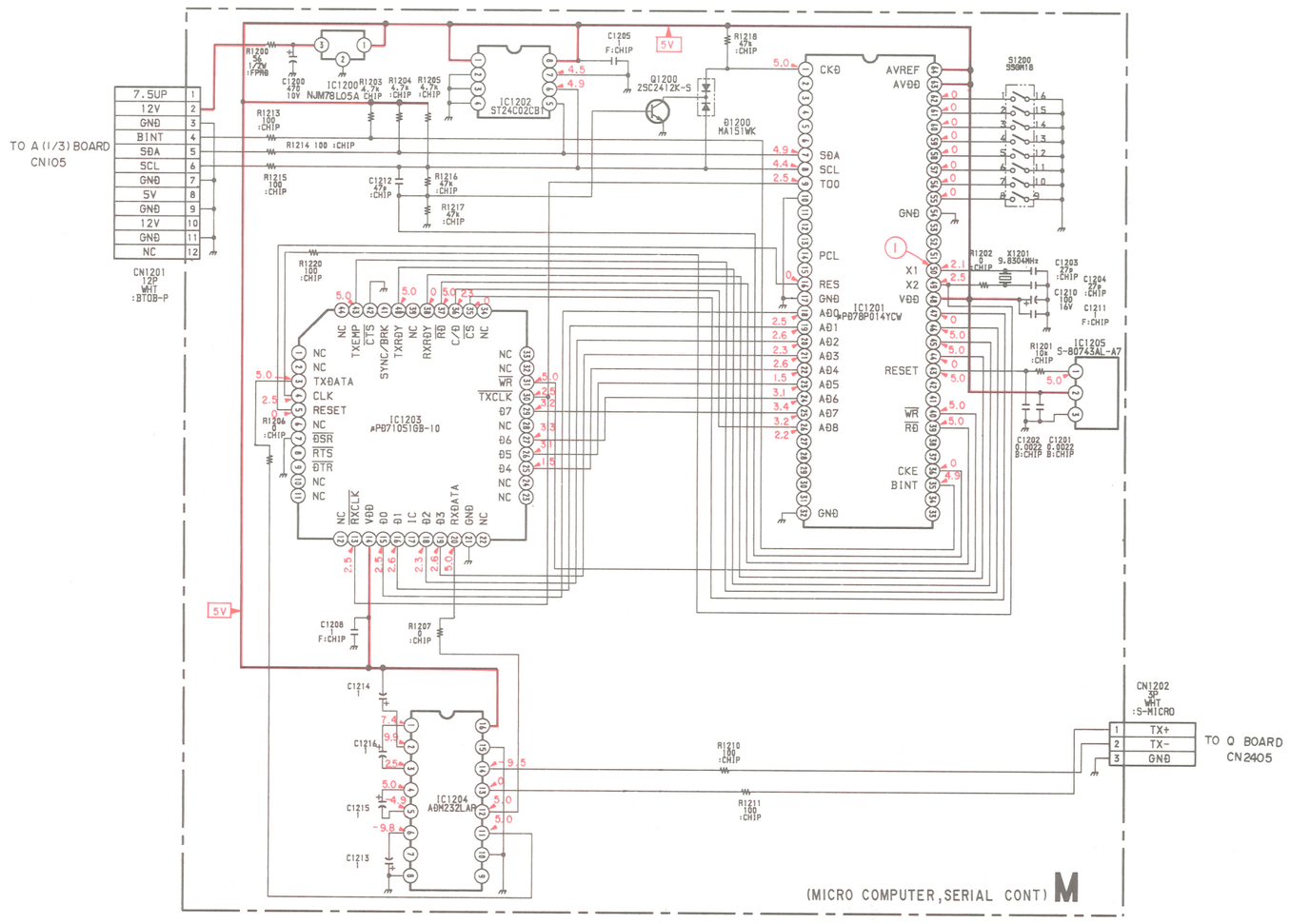

M BOARD WAVEFORMS

① 5.0 Vp-p (9.83 MHz)

M BOARD

IC1200	+5V REG
IC1201	MICRO COMPUTER
IC1202	MEMORY
IC1203	SERIAL CONT
IC1204	BUFFER
IC1205	RESET
Q1200	CLOCK BUFFER
D1200	COMBINE

C [R. G. B OUT]

M [MICRO COMPUTER, SERIAL CONT]

– C BOARD –

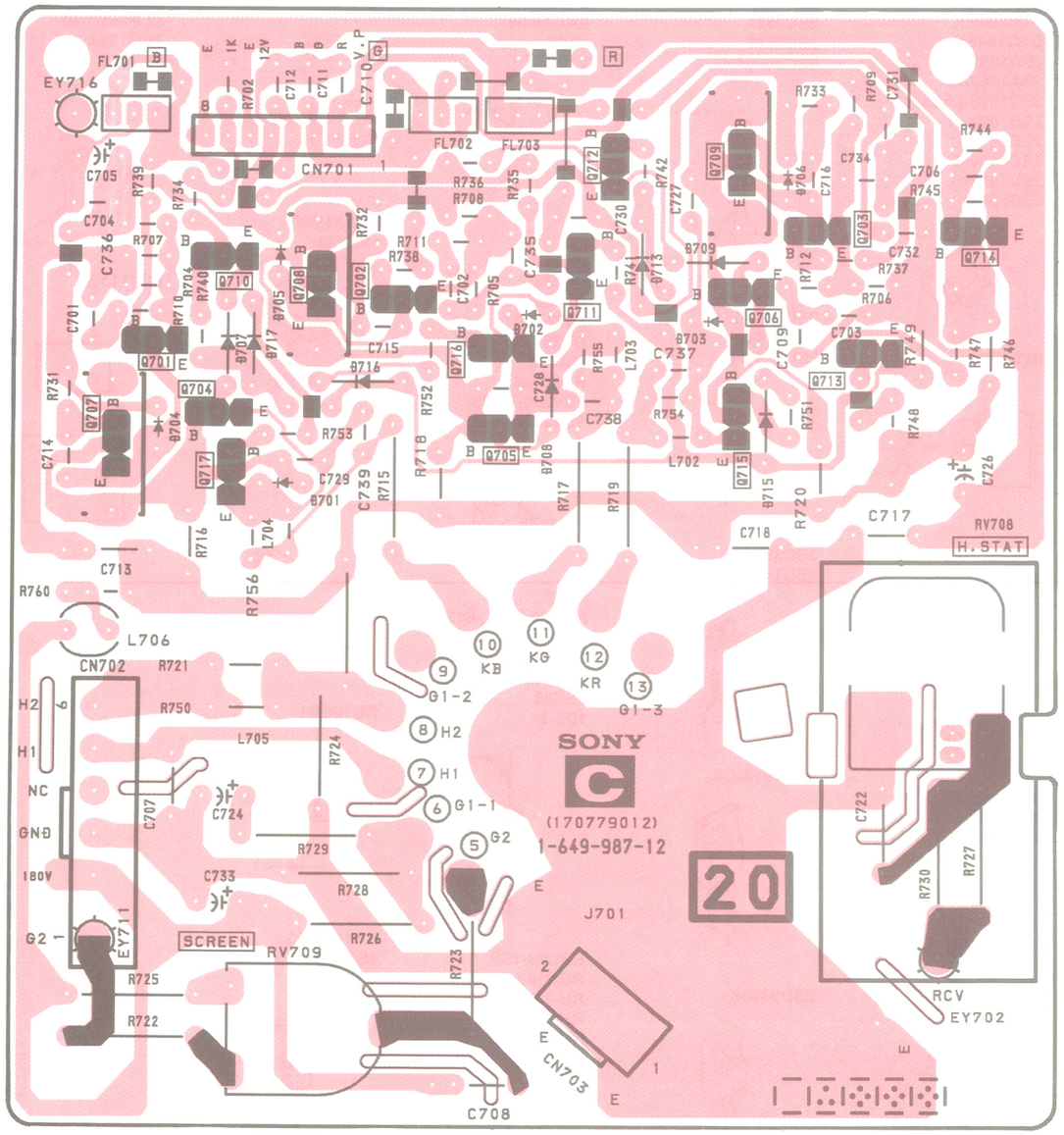

– M BOARD –

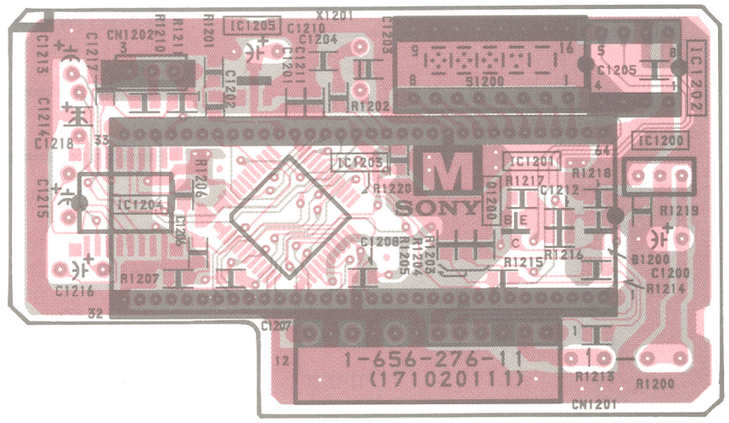

Note:

- : Pattern from the side which enables seeing.
- : Pattern of the rear.

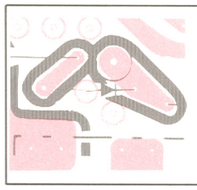

NOTE:
The circuit indicated as left contains high voltage of over 600 Vp-p. Care must be paid to prevent an electric shock in inspection or repairing.

6-5. SEMICONDUCTORS

ADM232LAR-REEL
BU4053BCF
MC14052BF
MC14094BF
MC14538BF
SN74HC4040ANS

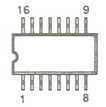

(TOP VIEW)

AN5265

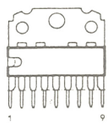

BA10324AF
LM324DR
MC14024BF
MC14066BF
MC14584BF
XRU4066BCF-E2

(TOP VIEW)

BA7655AF-E2
CXA1211M
LM358D
LM358DR
MM1111XF
MM1113XFF
MM1114XFF
NJM2245M
XRA10393F
XRA10393FU
XRA4558F
UPC4558G2

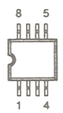

(TOP VIEW)

CXA1478S

(TOP VIEW)

H8D7249

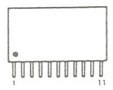

MCT78M05FA
NJM78M05FA
TA7805S

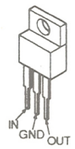

M51279FP

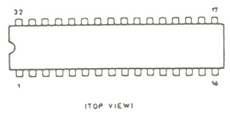

(TOP VIEW)

M62358FP-E1

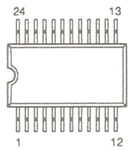

(TOP VIEW)

NJM78L05A

STR-S3115

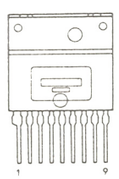

STR-M6523

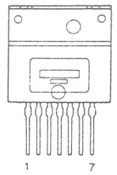

ST24C02CB1

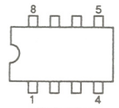

(TOP VIEW)

S-80743AL-A7

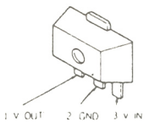

UPC1377C

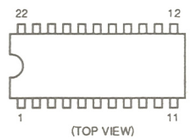

(TOP VIEW)

UPD6451AGT-632-E2

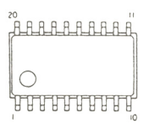

UPC71051GB-10

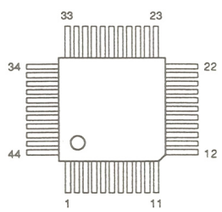

UPD78P014YCW
UPD78013YCW-Y04

(TOP VIEW)

XRA17812T

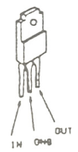

Z8612812PSC

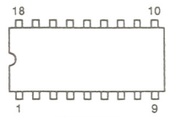

(TOP VIEW)

DTA144EK
DTC124EK
DTC144EK
2SA1037K
2SA1162-G
2SC1623-L5L6
2SB709A-R
2SC2412K
2SC4154-E
2SD1328-S
2SD601A

IMT1US

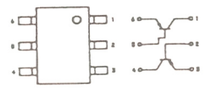

IMX1

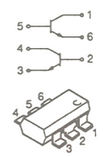

2SA1091-O
2SC2551-O
2SC2551-RO

2SA1175-HFE
2SC2785-HFE

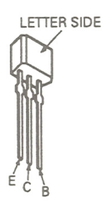

2SA1220A
2SC2611
2SC2688
2SC2690A-Q

2SC2958-L
2SD774-3
2SD774-34

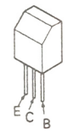

2SC3851
2SD1134-C

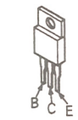

2SD1878-CA

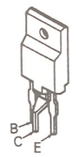

2SD2396K

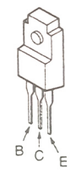

2SK94

DSA3A4
ERC38-06
V19E
V19G

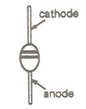

DTZ11B
DTZ13C
DTZ3.6A
DTZ5.6B
DTZ6.2
MA110
RD4.7SB
1SV230-TPH3
1SV232-TPH3

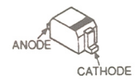

EL1Z
RGP02-17EL-6433
RGP10G
RGP10GPKG23
UF5406
1SS83
10E-2

ERC06-15S
RGP15J-6040
RH-1A
RH-1Z
RU-3AM
SIB01-06

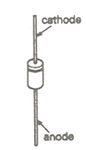

FML-G12S

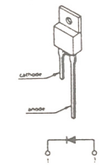

MA151WK
1SS184

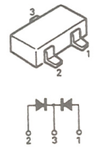

MA157
1SS226

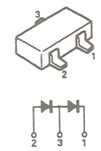

RD10SB1

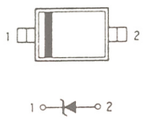

RD16ESB3
1SS119
1SS133

1S2835
1S2836

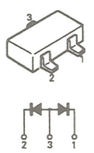

SEL4410E-D
SLP281C-50
TLG123A
TLY123

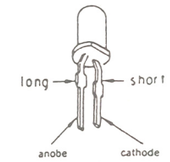

PC111YS

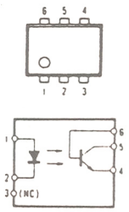

SECTION 7
EXPLODED VIEWS

NOTE:
- Items with no part number and no description are not stocked because they are seldom required for routine service.
- The construction parts of an assembled part are indicated with a collation number in the remark column.
- Items marked " ★ " are not stocked since they are seldom required for routine service. Some delay should be anticipated when ordering these items.

The components identified by shading and mark ⚠ are critical for safety.
Replace only with part number specified.

Les composants identifies par une trame et une marque ⚠ sont critiques pour la securite.
Ne les remplacer que par une piece portant le numero specifie.

7-1. CHASSIS

● : +BVTP 4×16 7-685-663-79
■ : +BVTP 3×12 7-685-648-79
○ : +PS 4×8 7-682-661-09
□ : +BVTT 4×8 7-682-561-04
△ : +BVTP 3×8 7-685-646-79

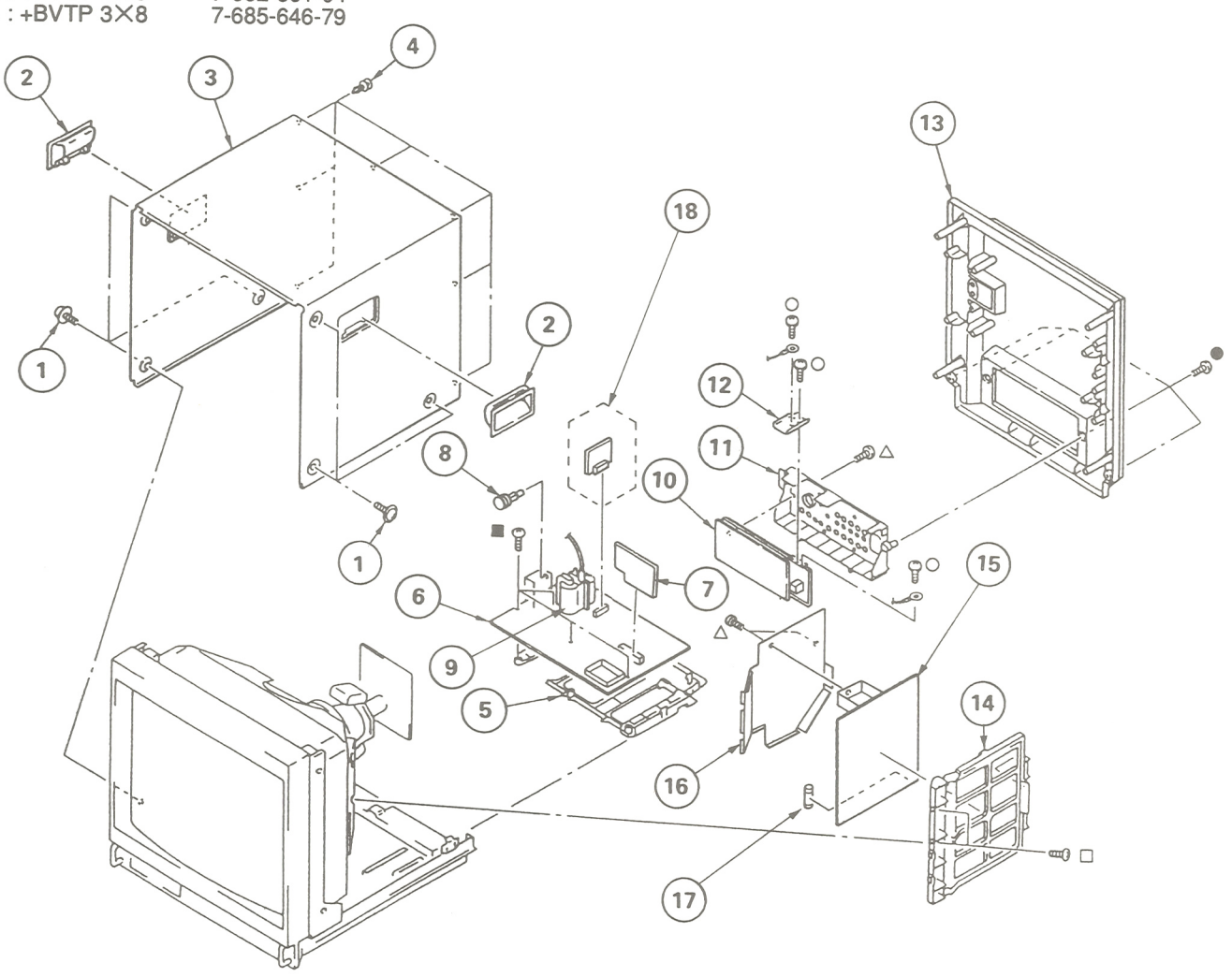

REF.NO.	PART NO.	DESCRIPTION	REMARK
1	4-847-802-11	SCREW (OS), CASE, CLAW	
2	4-043-825-11	HANDLE	
3	4-043-675-31	COVER, TOP	
4	4-391-825-01	RIVET, NYLON	
5	*4-043-690-01	BRACKET, MAIN	
6	*A-1297-470-A	A BOARD, COMPLETE	
7	*A-1304-032-A	M BOARD, COMPLETE	
8	4-386-618-01	RIVET, T TYPE	
9	⚠ 1-453-164-11	TRANSFORMER ASSY, FLYBACK	
10	1-537-877-11	TERMINAL BOARD ASSY, I/O (Q BOARD)	
11	*4-043-688-21	PANEL, CONNECTOR	
12	*4-043-678-01	TERMINAL, GROUND	
13	4-043-677-01	COVER, REAR	
14	*4-043-689-01	BRACKET, G	
15	*A-1316-215-A	G BOARD, COMPLETE (PVM-2053MD)	
	*A-1316-216-A	G BOARD, COMPLETE (PVM-1953MD)	
16	*4-047-436-01	SHIELD, G PC BOARD	
17	⚠ 1-532-745-11	FUSE, GLASS TUBE 3.15A/125V (PVM-1953MD)	
	⚠ 1-576-230-11	FUSE, (H.B.C.) 3.15A/250V (PVM-2053MD)	
18	*A-1390-391-B	S BOARD, COMPLETE (PVM-1953MD)	

The components identified by shading and mark ⚠ are critical for safety.
Replace only with part number specified.

Les composants identifies par une trame et une marque ⚠ sont critiques pour la securite.
Ne les remplacer que par une piece portant le numero specifie.

7-2. PICTURE TUBE

● : +BVTP 4×16 7-685-663-79
■ : +BVTP 3×12 7-685-648-79
▲ : +B 4×12 7-682-563-09
▽ : +BVTT 4×12 7-685-883-09
☆ : +BVTP 4×10 7-685-660-79
★ : +P 4×20 7-621-846-58
▼ : LW4 TYPE1 7-623-310-07

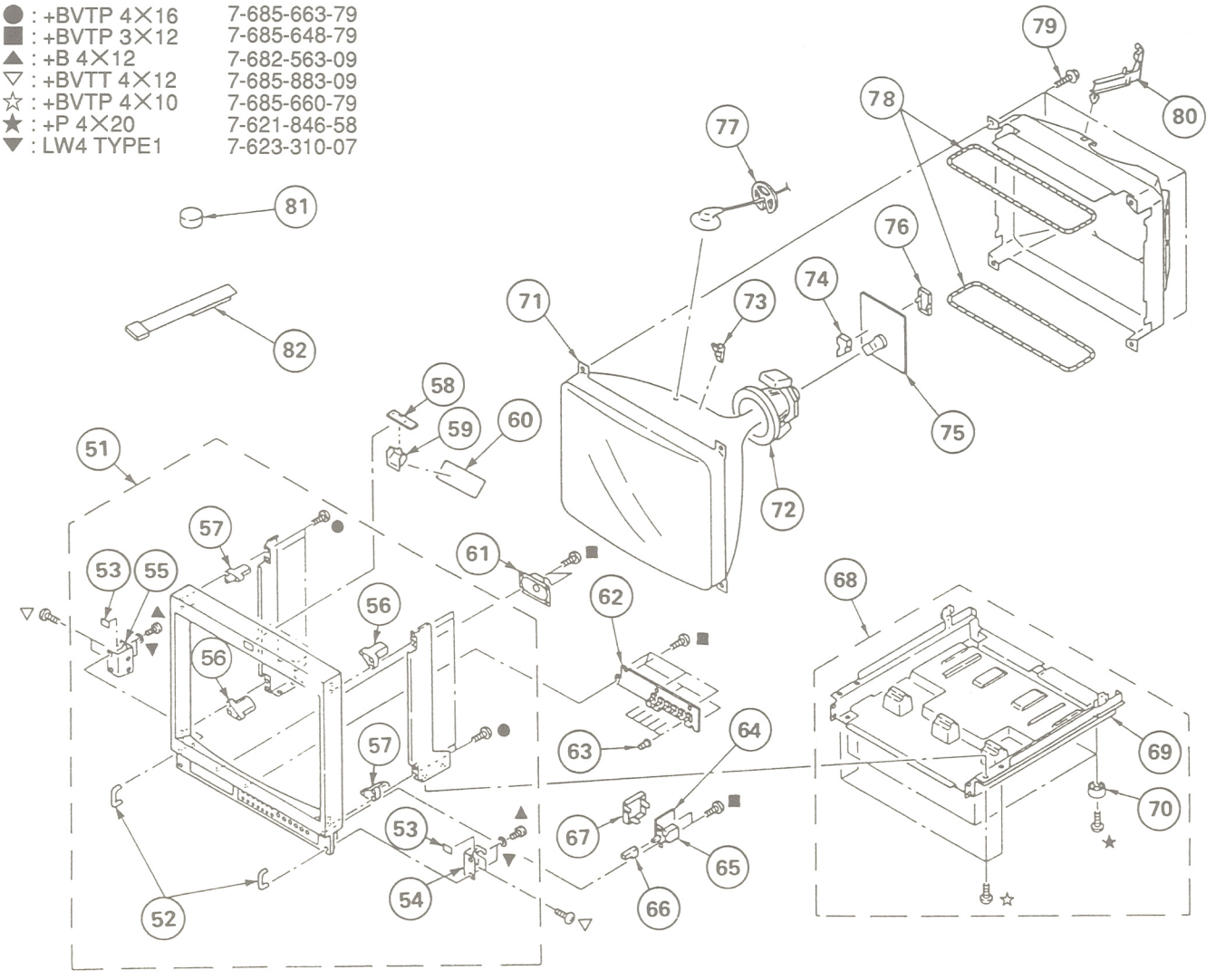

REF.NO.	PART NO.	DESCRIPTION	REMARK
51	X-4032-541-1	BEZEL ASSY	
52	4-043-680-11	HANDLE, PROTECTOR	
53	*4-043-797-01	PLATE, BLIND	
54	*4-043-670-01	REINFORCEMENT (R), HANDLE	
55	*4-043-669-01	REINFORCEMENT (L), HANDLE	
56	*4-043-672-01	BRACKET (A), PICTURE TUBE	
57	*4-043-673-01	BRACKET (B), PICTURE TUBE	
58	*A-1390-498-A	X BOARD, COMPLETE	
59	*4-043-671-01	REFLECTOR, LED	
60	4-044-606-01	CUSHION, TALLY	
61	1-544-063-12	SPEAKER	
62	*A-1372-094-A	H BOARD, COMPLETE	
63	X-4030-162-3	KNOB ASSY, CONTROL	
64	*A-1388-166-A	J BOARD, COMPLETE	
65	⚠1-692-921-11	SWITCH, PUSH (A.C. POWER)	
66	4-043-683-01	BUTTOM, POWER SWITCH	
67	4-043-681-01	COVER, AC SWITCH	
68	*X-4031-740-1	CABINET ASSY, BOTTOM	
69	*4-043-674-01	CABINET, BOTTOM	
70	4-901-947-01	LEG	

REF.NO.	PART NO.	DESCRIPTION	REMARK
71	⚠8-736-122-05	PICTURE TUBE 20FZ2 (PVM-2053MD)	
	⚠8-736-126-05	PICTURE TUBE 20FZ-2 (PVM-2053MD)	
	⚠8-736-124-05	PICTURE TUBE 20FZ4 (PVM-1953MD)	
72	⚠1-451-349-12	DEFLECTION YOKE (Y20FZA)	
73	3-703-961-01	SPACER, DY	
74	*4-379-167-01	COVER (MAIN), CV	
75	*A-1331-300-A	C BOARD, COMPLETE	
76	*4-379-160-01	COVER (REAR LID), CV	
77	*3-704-372-01	HOLDER, HV CABLE	
78	⚠1-426-505-11	COIL, DEMAGNETIZATION	
79	4-365-808-01	SCREW (5), TAPPING	
80	*4-387-284-01	HOLDER, LEAD	
81	1-452-032-00	MAGNET, DISC	
82	X-4309-608-0	PERMALLOY ASSY, CONVERGENCE	

SECTION 8
ELECTRICAL PARTS LIST

A

NOTE:

The components identified by shading and mark ⚠ are critical for safety.
Replace only with part number specified.

Les composants identifies par une trame et une marque ⚠ sont critiques pour la securite.
Ne les remplacer que par une piece portant le numero specifie.

- Items marked " * " are not stocked since they are seldom required for routine service. Some delay should be anticipated when ordering these items.
- All variable and adjustable resistors have characteristic curve B, unless otherwise noted.

RESISTORS
- All resistors are in ohms
- F : nonflammable

When indicating parts by reference number, please include the board name.

CAPACITORS
- MF : μF, PF : μμF

COILS
- MMH : mH, UH : μH

- The components identified by ⊠ in this manual have been carefully factory-selected for each set in order to satisfy regulations regarding X-ray radiation. Should replacement be required, replace only with the value originally used.
- ※ : Selected to yield optimum performance.
- There are some cases the reference number on one board overlaps on the other board. Therefore, when ordering parts by the reference number, please include the board name.

REF.NO.	PART NO.	DESCRIPTION			REMARK
	*A-1297-470-A	A BOARD, COMPLETE			
		**********			
	1-540-044-11	SOCKET, IC			
	*4-030-359-01	HEAT SINK, H. PIN			
	*4-043-154-01	HOLDER, IC			
	*4-043-994-01	PLATE (CF), SHIELD			
	4-363-414-00	SPACER, MICA			
	4-382-854-11	SCREW (M3X10), P, SW (+)			
		<FILTER>			
BPF400	1-236-363-11	FILTER, BAND PASS			
		<CAPACITOR>			
C105	1-163-251-11	CERAMIC CHIP	100PF	5%	50V
C114	1-163-031-11	CERAMIC CHIP	0.01MF		50V
C115	1-163-031-11	CERAMIC CHIP	0.01MF		50V
C116	1-163-031-11	CERAMIC CHIP	0.01MF		50V
C117	1-163-031-11	CERAMIC CHIP	0.01MF		50V
C118	1-163-125-00	CERAMIC CHIP	220PF	5%	50V
C119	1-165-319-11	CERAMIC CHIP	0.1MF		50V
C121	1-163-237-11	CERAMIC CHIP	27PF	5%	50V
C123	1-165-319-11	CERAMIC CHIP	0.1MF		50V
C124	1-163-251-11	CERAMIC CHIP	100PF	5%	50V
C132	1-163-141-00	CERAMIC CHIP	0.001MF	5%	50V
C133	1-163-251-11	CERAMIC CHIP	100PF	5%	50V
C134	1-163-251-11	CERAMIC CHIP	100PF	5%	50V
C135	1-163-251-11	CERAMIC CHIP	100PF	5%	50V
C136	1-163-251-11	CERAMIC CHIP	100PF	5%	50V
C140	1-164-004-11	CERAMIC CHIP	0.1MF	10%	25V
C141	1-164-161-11	CERAMIC CHIP	0.0022MF	10%	50V
C142	1-163-125-00	CERAMIC CHIP	220PF	5%	50V
C143	1-165-319-11	CERAMIC CHIP	0.1MF		50V
C144	1-165-319-11	CERAMIC CHIP	0.1MF		50V
C145	1-165-319-11	CERAMIC CHIP	0.1MF		50V
C154	1-163-037-11	CERAMIC CHIP	0.022MF	10%	25V
C155	1-163-023-00	CERAMIC CHIP	0.015MF	10%	50V
C156	1-163-019-00	CERAMIC CHIP	0.0068MF	10%	50V
C157	1-163-019-00	CERAMIC CHIP	0.0068MF	10%	50V
C158	1-163-809-11	CERAMIC CHIP	0.047MF	10%	25V
C159	1-163-037-11	CERAMIC CHIP	0.022MF	10%	25V
C161	1-124-477-11	ELECT	47MF	20%	16V
C162	1-163-141-00	CERAMIC CHIP	0.001MF	5%	50V
C164	1-165-319-11	CERAMIC CHIP	0.1MF		50V
C165	1-165-319-11	CERAMIC CHIP	0.1MF		50V
C166	1-164-004-11	CERAMIC CHIP	0.1MF	10%	25V
C167	1-124-472-11	ELECT	470MF	20%	10V
C168	1-124-472-11	ELECT	470MF	20%	10V
C169	1-164-232-11	CERAMIC CHIP	0.01MF	10%	50V
C171	1-163-251-11	CERAMIC CHIP	100PF	5%	50V
C174	1-163-243-11	CERAMIC CHIP	47PF	5%	50V
C175	1-163-109-00	CERAMIC CHIP	47PF	5%	50V
C200	1-124-927-11	ELECT	4.7MF	20%	50V
C201	1-106-383-00	MYLAR	0.047MF	10%	100V
C202	1-163-017-00	CERAMIC CHIP	0.0047MF	10%	50V
C203	1-124-927-11	ELECT	4.7MF	20%	50V
C204	1-124-907-11	ELECT	10MF	20%	50V
C205	1-124-360-00	ELECT	1000MF	20%	16V
C206	1-126-375-11	ELECT	100MF	20%	25V
C207	1-124-478-11	ELECT	100MF	20%	25V
C208	1-124-907-11	ELECT	10MF	20%	50V
C209	1-124-927-11	ELECT	4.7MF	20%	50V
C304	1-164-004-11	CERAMIC CHIP	0.1MF	10%	25V
C305	1-163-125-00	CERAMIC CHIP	220PF	5%	50V
C306	1-163-031-11	CERAMIC CHIP	0.01MF		50V
C310	1-164-004-11	CERAMIC CHIP	0.1MF	10%	25V
C311	1-163-809-11	CERAMIC CHIP	0.047MF	10%	25V
C312	1-124-925-11	ELECT	2.2MF	20%	50V
C313	1-163-145-00	CERAMIC CHIP	0.0015MF	5%	50V
C314	1-163-249-11	CERAMIC CHIP	82PF	5%	50V
C315	1-124-907-11	ELECT	10MF	20%	50V
C316	1-124-477-11	ELECT	47MF	20%	25V
C318	1-124-907-11	ELECT	10MF	20%	50V
C325	1-124-907-11	ELECT	10MF	20%	50V
C340	1-163-031-11	CERAMIC CHIP	0.01MF		50V
C343	1-163-031-11	CERAMIC CHIP	0.01MF		50V
C349	1-163-141-00	CERAMIC CHIP	0.001MF	5%	50V
C350	1-163-141-00	CERAMIC CHIP	0.001MF	5%	50V
C352	1-163-031-11	CERAMIC CHIP	0.01MF		50V
C353	1-165-319-11	CERAMIC CHIP	0.1MF		50V
C354	1-163-121-00	CERAMIC CHIP	150PF	5%	50V
C355	1-124-903-11	ELECT	1MF	20%	50V
C356	1-124-927-11	ELECT	4.7MF	20%	50V
C357	1-163-031-11	CERAMIC CHIP	0.01MF		50V
C358	1-163-031-11	CERAMIC CHIP	0.01MF		50V
C359	1-124-477-11	ELECT	47MF	20%	25V
C360	1-164-232-11	CERAMIC CHIP	0.01MF	10%	50V
C361	1-163-031-11	CERAMIC CHIP	0.01MF		50V
C362	1-163-031-11	CERAMIC CHIP	0.01MF		50V
C363	1-163-099-00	CERAMIC CHIP	18PF	5%	50V
C364	1-163-031-11	CERAMIC CHIP	0.01MF		50V
C365	1-106-343-00	MYLAR	0.001MF	10%	100V
C366	1-163-031-11	CERAMIC CHIP	0.01MF		50V
C367	1-163-031-11	CERAMIC CHIP	0.01MF		50V
C368	1-124-907-11	ELECT	10MF	20%	50V
C369	1-164-298-11	CERAMIC CHIP	0.15MF	10%	25V
C370	1-124-477-11	ELECT	47MF	20%	25V
C371	1-124-477-11	ELECT	47MF	20%	25V
C372	1-163-031-11	CERAMIC CHIP	0.01MF		50V
C373	1-163-141-00	CERAMIC CHIP	0.001MF	5%	50V

A

REF.NO.	PART NO.	DESCRIPTION			REMARK
C374	1-124-903-11	ELECT	1MF	20%	50V
C375	1-163-125-00	CERAMIC CHIP	220PF	5%	50V
C376	1-124-902-00	ELECT	0.47MF	20%	50V
C377	1-163-809-11	CERAMIC CHIP	0.047MF	10%	25V
C378	1-163-809-11	CERAMIC CHIP	0.047MF	10%	25V
C379	1-163-031-11	CERAMIC CHIP	0.01MF		50V
C380	1-124-360-00	ELECT	1000MF	20%	16V
C381	1-163-031-11	CERAMIC CHIP	0.01MF		50V
C382	1-163-243-11	CERAMIC CHIP	47PF	5%	50V
C383	1-124-477-11	ELECT	47MF	20%	25V
C384	1-163-249-11	CERAMIC CHIP	82PF	5%	50V
C385	1-124-477-11	ELECT	47MF	20%	25V
C386	1-124-907-11	ELECT	10MF	20%	50V
C387	1-163-141-00	CERAMIC CHIP	0.001MF	5%	50V
C388	1-124-907-11	ELECT	10MF	20%	50V
C390	1-163-243-11	CERAMIC CHIP	47PF	5%	50V
C391	1-124-477-11	ELECT	47MF	20%	25V
C392	1-164-298-11	CERAMIC CHIP	0.15MF	10%	25V
C393	1-164-298-11	CERAMIC CHIP	0.15MF	10%	25V
C394	1-124-477-11	ELECT	47MF	20%	25V
C395	1-163-235-11	CERAMIC CHIP	22PF	5%	50V
C396	1-164-299-11	CERAMIC CHIP	0.22MF	10%	25V
C397	1-124-477-11	ELECT	47MF	20%	25V
C398	1-124-477-11	ELECT	47MF	20%	25V
C399	1-124-477-11	ELECT	47MF	20%	25V
C400	1-164-004-11	CERAMIC CHIP	0.1MF	10%	25V
C401	1-164-346-11	CERAMIC CHIP	1MF		16V
C402	1-124-910-11	ELECT	47MF	20%	50V
C403	1-164-232-11	CERAMIC CHIP	0.01MF	10%	50V
C406	1-124-916-11	ELECT	22MF	20%	50V
C407	1-124-477-11	ELECT	47MF	20%	25V
C408	1-164-232-11	CERAMIC CHIP	0.01MF	10%	50V
C409	1-163-031-11	CERAMIC CHIP	0.01MF		50V
C410	1-124-916-11	ELECT	22MF	20%	50V
C411	1-164-004-11	CERAMIC CHIP	0.1MF	10%	25V
C414	1-163-031-11	CERAMIC CHIP	0.01MF		50V
C415	1-124-907-11	ELECT	10MF	20%	50V
C416	1-164-232-11	CERAMIC CHIP	0.01MF	10%	50V
C417	1-164-232-11	CERAMIC CHIP	0.01MF	10%	50V
C418	1-164-182-11	CERAMIC CHIP	0.0033MF	10%	50V
C419	1-124-472-11	ELECT	470MF	20%	10V
C420	1-163-809-11	CERAMIC CHIP	0.047MF	10%	25V
C421	1-164-222-11	CERAMIC CHIP	0.22MF		25V
C422	1-124-903-11	ELECT	1MF	20%	50V
C423	1-163-809-11	CERAMIC CHIP	0.047MF	10%	25V
C424	1-163-809-11	CERAMIC CHIP	0.047MF	10%	25V
C426	1-163-243-11	CERAMIC CHIP	47PF	5%	50V
C427	1-163-031-11	CERAMIC CHIP	0.01MF		50V
C428	1-124-119-00	ELECT	330MF	20%	16V
C429	1-163-031-11	CERAMIC CHIP	0.01MF		50V
C430	1-124-119-00	ELECT	330MF	20%	16V
C431	1-165-319-11	CERAMIC CHIP	0.1MF		50V
C432	1-164-004-11	CERAMIC CHIP	0.1MF	10%	25V
C433	1-163-235-11	CERAMIC CHIP	22PF	5%	50V
C434	1-163-031-11	CERAMIC CHIP	0.01MF		50V
C435	1-163-089-00	CERAMIC CHIP	6PF	0.25PF	50V
C436	1-164-004-11	CERAMIC CHIP	0.1MF	10%	25V
C437	1-164-004-11	CERAMIC CHIP	0.1MF	10%	25V
C438	1-163-809-11	CERAMIC CHIP	0.047MF	10%	25V
C439	1-163-809-11	CERAMIC CHIP	0.047MF	10%	25V
C440	1-163-031-11	CERAMIC CHIP	0.01MF		50V
C441	1-126-962-11	ELECT	3.3MF	20%	50V
C442	1-163-809-11	CERAMIC CHIP	0.047MF	10%	25V
C443	1-163-107-00	CERAMIC CHIP	39PF	5%	50V
C444	1-165-319-11	CERAMIC CHIP	0.1MF		50V
C445	1-163-809-11	CERAMIC CHIP	0.047MF	10%	25V
C446	1-163-229-11	CERAMIC CHIP	12PF	5%	50V
C447	1-163-263-11	CERAMIC CHIP	330PF	5%	50V
C448	1-163-107-00	CERAMIC CHIP	39PF	5%	50V
C449	1-163-227-11	CERAMIC CHIP	10PF	0.5PF	50V
C450	1-163-809-11	CERAMIC CHIP	0.047MF	10%	25V
C451	1-164-004-11	CERAMIC CHIP	0.1MF	10%	25V
C452	1-163-263-11	CERAMIC CHIP	330PF	5%	50V
C453	1-163-031-11	CERAMIC CHIP	0.01MF		50V
C454	1-163-107-00	CERAMIC CHIP	39PF	5%	50V
C455	1-163-263-11	CERAMIC CHIP	330PF	5%	50V
C456	1-163-229-11	CERAMIC CHIP	12PF	5%	50V
C457	1-163-031-11	CERAMIC CHIP	0.01MF		50V
C458	1-163-249-11	CERAMIC CHIP	82PF	5%	50V
C459	1-165-319-11	CERAMIC CHIP	0.1MF		50V
C460	1-164-004-11	CERAMIC CHIP	0.1MF	10%	25V
C461	1-163-119-00	CERAMIC CHIP	120PF	5%	50V
C462	1-163-031-11	CERAMIC CHIP	0.01MF		50V
C463	1-163-031-11	CERAMIC CHIP	0.01MF		50V
C464	1-164-299-11	CERAMIC CHIP	0.22MF	10%	25V
C465	1-163-097-00	CERAMIC CHIP	15PF	5%	50V
C466	1-163-119-00	CERAMIC CHIP	120PF	5%	50V
C467	1-163-119-00	CERAMIC CHIP	120PF	5%	50V
C469	1-163-037-11	CERAMIC CHIP	0.022MF	10%	25V
C470	1-163-243-11	CERAMIC CHIP	47PF	5%	50V
C471	1-163-105-00	CERAMIC CHIP	33PF	5%	50V
C472	1-163-031-11	CERAMIC CHIP	0.01MF		50V
C473	1-163-031-11	CERAMIC CHIP	0.01MF		50V
C475	1-163-031-11	CERAMIC CHIP	0.01MF		50V
C476	1-163-031-11	CERAMIC CHIP	0.01MF		50V
C477	1-164-299-11	CERAMIC CHIP	0.22MF	10%	25V
C478	1-124-907-11	ELECT	10MF	20%	50V
C479	1-163-121-00	CERAMIC CHIP	150PF	5%	50V
C482	1-124-472-11	ELECT	470MF	20%	10V
C483	1-163-249-11	CERAMIC CHIP	82PF	5%	50V
C484	1-163-113-00	CERAMIC CHIP	68PF	5%	50V
C485	1-163-113-00	CERAMIC CHIP	68PF	5%	50V
C486	1-163-249-11	CERAMIC CHIP	82PF	5%	50V
C487	1-163-235-11	CERAMIC CHIP	22PF	5%	50V
C488	1-163-097-00	CERAMIC CHIP	15PF	5%	50V
C490	1-164-336-11	CERAMIC CHIP	0.33MF		25V
C491	1-164-336-11	CERAMIC CHIP	0.33MF		25V
C492	1-164-336-11	CERAMIC CHIP	0.33MF		25V
C493	1-104-760-11	CERAMIC CHIP	0.047MF	10%	50V
C494	1-104-760-11	CERAMIC CHIP	0.047MF	10%	50V
C495	1-124-907-11	ELECT	10MF	20%	50V
C496	1-163-239-11	CERAMIC CHIP	33PF	5%	50V
C497	1-163-011-11	CERAMIC CHIP	0.0015MF	10%	50V
C498	1-124-925-11	ELECT	2.2MF	20%	50V
C499	1-163-031-11	CERAMIC CHIP	0.01MF		50V
C500	1-164-004-11	CERAMIC CHIP	0.1MF	10%	25V
C501	1-164-182-11	CERAMIC CHIP	0.0033MF	10%	50V
C502	1-163-141-00	CERAMIC CHIP	0.001MF	5%	50V
C503	1-163-251-11	CERAMIC CHIP	100PF	5%	50V
C504	1-136-495-11	FILM	0.068MF	5%	50V
C505	1-163-199-00	CERAMIC CHIP	560PF	5%	50V
C506	1-124-902-00	ELECT	0.47MF	20%	50V
C507	1-126-375-11	ELECT	100MF	20%	25V
C508	1-130-495-00	MYLAR	0.1MF	5%	50V
C509	1-124-935-11	ELECT	470MF	20%	100V
C511	1-108-700-11	MYLAR	0.047MF	10%	200V
C512	1-124-902-00	ELECT	0.47MF	20%	50V

The components identified by shading and mark ⚠ are critical for safety.
Replace only with part number specified.

Les composants identifies par une trame et une marque ⚠ sont critiques pour la securite.
Ne les remplacer que par une piece portant le numero specifie.

A

REF.NO.	PART NO.	DESCRIPTION				REMARK
C513	1-126-096-11	ELECT	10MF	20%	25V	
C514	1-129-718-00	FILM	0.022MF	10%	630V	
C515	1-163-809-11	CERAMIC CHIP	0.047MF	10%	25V	
C516	1-102-030-00	CERAMIC	330PF	10%	500V	
C517	1-163-024-00	CERAMIC CHIP	0.018MF	10%	50V	
C518	1-107-995-11	ELECT	100MF	0	160V	
C519	1-163-017-00	CERAMIC CHIP	0.0047MF	10%	50V	
C520	1-163-257-11	CERAMIC CHIP	180PF	5%	50V	
C521	1-162-114-00	CERAMIC	0.0047MF		2KV	
C522	1-124-360-00	ELECT	1000MF	20%	16V	
C523	1-126-801-11	ELECT	1MF	20%	50V	
C525 ⚠	1-136-904-11	FILM	0.0115MF	3%	2KV	
C526 ⚠	1-162-116-91	CERAMIC	680PF	10%	2KV	
C527	1-162-133-00	CERAMIC	390PF	10%	2KV	
C529	1-104-797-11	ELECT	0.47MF	20%	50V	
C530	1-124-120-11	ELECT	220MF	20%	25V	
C531	1-124-477-11	ELECT	47MF	20%	25V	
C532	1-163-031-11	CERAMIC CHIP	0.01MF		50V	
C533	1-102-212-00	CERAMIC	820PF	10%	500V	
C534	1-123-948-00	ELECT	22MF	20%	250V	
C537	1-124-913-11	ELECT	470MF	20%	50V	
C538	1-106-367-00	MYLAR	0.01MF	10%	100V	
C539	1-130-480-00	FILM	0.0056MF	5%	50V	
C540	1-163-133-00	CERAMIC CHIP	470PF	5%	50V	
C541	1-124-927-11	ELECT	4.7MF	20%	50V	
C542	1-106-351-00	MYLAR	0.0022MF	10%	100V	
C543	1-106-351-00	MYLAR	0.0022MF	10%	100V	
C544	1-106-367-00	MYLAR	0.01MF	10%	100V	
C545	1-102-212-00	CERAMIC	820PF	10%	500V	
C546	1-163-119-00	CERAMIC CHIP	120PF	5%	50V	
C547	1-163-251-11	CERAMIC CHIP	100PF	5%	50V	
C548	1-102-212-00	CERAMIC	820PF	10%	500V	
C549	1-124-667-11	ELECT	10MF	20%	50V	
C550	1-126-163-11	ELECT	4.7MF	20%	50V	
C551	1-106-375-12	MYLAR	0.022MF	10%	100V	
C552	1-126-336-11	ELECT	220MF	20%	25V	
C553	1-106-389-00	MYLAR	0.082MF	10%	200V	
C554	1-130-736-11	FILM	0.01MF	5%	50V	
C555	1-124-907-11	ELECT	10MF	20%	50V	
C556	1-124-907-11	ELECT	10MF	20%	50V	
C557	1-106-381-12	MYLAR	0.039MF	10%	100V	
C558	1-124-903-11	ELECT	1MF	20%	50V	
C559	1-136-173-00	FILM	0.47MF	5%	50V	
C561	1-136-159-00	FILM	0.033MF	5%	50V	
C562	1-163-249-11	CERAMIC CHIP	82PF	5%	50V	
C564	1-124-907-11	ELECT	10MF	20%	50V	
C565	1-124-903-11	ELECT	1MF	20%	50V	
C566	1-106-367-00	MYLAR	0.01MF	10%	100V	
C567	1-136-499-11	FILM	0.047MF	5%	50V	
C568	1-124-903-11	ELECT	1MF	20%	50V	
C569	1-131-350-00	TANTALUM	3.3MF	10%	25V	
C570	1-124-360-00	ELECT	1000MF	20%	16V	
C571	1-164-232-11	CERAMIC CHIP	0.01MF	10%	50V	
C572	1-104-709-11	ELECT	4.7MF	0	160V	
C573	1-136-177-00	FILM	1MF	5%	50V	
C575	1-163-031-11	CERAMIC CHIP	0.01MF		50V	
C576	1-102-244-00	CERAMIC	220PF	10%	500V	
C577	1-124-907-11	ELECT	10MF	20%	50V	
C578	1-136-111-00	FILM	1MF	5%	200V	
C579	1-126-804-11	ELECT	100MF	20%	50V	
C580	1-136-105-00	FILM	0.33MF	5%	200V	
C581	1-124-927-11	ELECT	4.7MF	20%	50V	
C582	1-102-002-00	CERAMIC	680PF	10%	500V	
C583	1-136-541-11	FILM	1.5MF	5%	200V	

REF.NO.	PART NO.	DESCRIPTION				REMARK
C584	1-123-267-00	ELECT	2.2MF	20%	160V	
C585	1-124-666-11	ELECT	4.7MF	20%	250V	
C586	1-124-557-11	ELECT	1000MF	20%	25V	
C587	1-102-030-00	CERAMIC	330PF	10%	500V	
C588	1-124-667-11	ELECT	10MF	20%	50V	
C589	1-102-030-00	CERAMIC	330PF	10%	500V	
C590	1-126-387-11	ELECT	2.2MF	20%	50V	
C591	1-106-371-00	MYLAR	0.015MF	10%	200V	
C592	1-123-932-00	ELECT	4.7MF	20%	160V	
C593	1-165-319-11	CERAMIC CHIP	0.1MF		50V	
C594	1-163-229-11	CERAMIC CHIP	12PF	5%	50V	
C595	1-126-336-11	ELECT	220MF	20%	25V	
C596	1-124-478-11	ELECT	100MF	20%	25V	
C597	1-164-346-11	CERAMIC CHIP	1MF		16V	
C598	1-164-346-11	CERAMIC CHIP	1MF		16V	
C599	1-126-157-11	ELECT	10MF	20%	16V	
C1300	1-124-477-11	ELECT	47MF	20%	25V	
C1302	1-163-131-00	CERAMIC CHIP	390PF	5%	50V	
C1304	1-124-477-11	ELECT	47MF	20%	25V	
C1305	1-124-477-11	ELECT	47MF	20%	25V	
C1306	1-163-031-11	CERAMIC CHIP	0.01MF		50V	
C1307	1-163-031-11	CERAMIC CHIP	0.01MF		50V	
C1308	1-124-443-00	ELECT	100MF	20%	10V	
C1309	1-163-257-11	CERAMIC CHIP	180PF	5%	50V	
C1310	1-163-031-11	CERAMIC CHIP	0.01MF		50V	
C1311	1-124-477-11	ELECT	47MF	20%	25V	
C1312	1-163-031-11	CERAMIC CHIP	0.01MF		50V	
C1313	1-163-031-11	CERAMIC CHIP	0.01MF		50V	
C1314	1-124-477-11	ELECT	47MF	20%	25V	
C1315	1-124-477-11	ELECT	47MF	20%	25V	
C1316	1-163-031-11	CERAMIC CHIP	0.01MF		50V	
C1317	1-124-477-11	ELECT	47MF	20%	25V	
C1318	1-124-477-11	ELECT	47MF	20%	25V	
C1319	1-124-477-11	ELECT	47MF	20%	25V	
C1320	1-124-477-11	ELECT	47MF	20%	25V	
C1321	1-124-477-11	ELECT	47MF	20%	25V	
C1322	1-124-120-11	ELECT	220MF	20%	16V	
C1323	1-163-031-11	CERAMIC CHIP	0.01MF		50V	
C1324	1-163-031-11	CERAMIC CHIP	0.01MF		50V	
C1325	1-163-031-11	CERAMIC CHIP	0.01MF		50V	
C1326	1-124-477-11	ELECT	47MF	20%	25V	
C1327	1-163-031-11	CERAMIC CHIP	0.01MF		50V	
C1328	1-163-031-11	CERAMIC CHIP	0.01MF		50V	
C1329	1-124-907-11	ELECT	10MF	20%	50V	
C1330	1-163-031-11	CERAMIC CHIP	0.01MF		50V	
C1331	1-124-477-11	ELECT	47MF	20%	25V	
C1332	1-124-477-11	ELECT	47MF	20%	25V	
C1333	1-124-477-11	ELECT	47MF	20%	25V	
C1334	1-163-227-11	CERAMIC CHIP	10PF	0.5PF	50V	
C1335	1-124-477-11	ELECT	47MF	20%	25V	
C1336	1-124-477-11	ELECT	47MF	20%	25V	
C1338	1-163-031-11	CERAMIC CHIP	0.01MF		50V	
C1339	1-163-031-11	CERAMIC CHIP	0.01MF		50V	
C1340	1-163-031-11	CERAMIC CHIP	0.01MF		50V	
C1341	1-163-275-11	CERAMIC CHIP	0.001MF	5%	50V	
C1342	1-163-105-00	CERAMIC CHIP	33PF	5%	50V	
C1343	1-163-113-00	CERAMIC CHIP	68PF	5%	50V	
C1344	1-163-083-00	CERAMIC CHIP	1PF	0.25PF	50V	
C1345	1-124-907-11	ELECT	10MF	20%	50V	
C1346	1-124-477-11	ELECT	47MF	20%	25V	
C1347	1-163-031-11	CERAMIC CHIP	0.01MF		50V	
C1348	1-163-127-00	CERAMIC CHIP	270PF	5%	50V	
C1349	1-163-117-00	CERAMIC CHIP	100PF	5%	50V	

A

REF.NO.	PART NO.	DESCRIPTION			REMARK
C1350	1-164-232-11	CERAMIC CHIP	0.01MF	10% 50V	
C1351	1-124-903-11	ELECT	1MF	20% 50V	
C1352	1-163-023-00	CERAMIC CHIP	0.015MF	10% 50V	
C1353	1-163-031-11	CERAMIC CHIP	0.01MF	50V	
C1354	1-163-121-00	CERAMIC CHIP	150PF	5% 50V	
C1355	1-163-125-00	CERAMIC CHIP	220PF	5% 50V	
C1356	1-163-235-11	CERAMIC CHIP	22PF	5% 50V	
C1357	1-124-119-00	ELECT	330MF	20% 16V	
C1358	1-124-477-11	ELECT	47MF	20% 25V	
C1359	1-163-263-11	CERAMIC CHIP	330PF	5% 50V	
C1360	1-163-001-11	CERAMIC CHIP	220PF	10% 50V	
C1362	1-163-249-11	CERAMIC CHIP	82PF	5% 50V	
C1363	1-163-235-11	CERAMIC CHIP	22PF	5% 50V	
C1364	1-163-133-00	CERAMIC CHIP	470PF	5% 50V	
C1365	1-163-227-11	CERAMIC CHIP	10PF	0.5PF 50V	
C1366	1-124-477-11	ELECT	47MF	20% 25V	
C1367	1-124-477-11	ELECT	47MF	20% 25V	
C1372	1-124-477-11	ELECT	47MF	20% 25V	
C1373	1-124-477-11	ELECT	47MF	20% 25V	
C1374	1-124-477-11	ELECT	47MF	20% 25V	
C1375	1-124-927-11	ELECT	4.7MF	20% 50V	
C1378	1-163-097-00	CERAMIC CHIP	15PF	5% 50V	
C1382	1-124-443-00	ELECT	100MF	20% 10V	
C1384	1-163-038-91	CERAMIC CHIP	0.1MF	25V	
C1385	1-163-031-11	CERAMIC CHIP	0.01MF	50V	
C1386	1-163-031-11	CERAMIC CHIP	0.01MF	50V	
C1387	1-163-031-11	CERAMIC CHIP	0.01MF	50V	
C1391	1-164-222-11	CERAMIC CHIP	0.22MF	25V	
C1392	1-124-234-00	ELECT	22MF	20% 16V	
C1394	1-124-477-11	ELECT	47MF	20% 16V	
C1395	1-124-477-11	ELECT	47MF	20% 16V	
C1396	1-163-275-11	CERAMIC CHIP	0.001MF	5% 50V	
C1397	1-163-031-11	CERAMIC CHIP	0.01MF	50V	
C1398	1-124-477-11	ELECT	47MF	20% 16V	
C1399	1-124-234-00	ELECT	22MF	20% 16V	
C1400	1-163-031-11	CERAMIC CHIP	0.01MF	50V	
C1401	1-136-173-00	FILM	0.47MF	5% 50V	
C1402	1-163-031-11	CERAMIC CHIP	0.01MF	50V	
C1403	1-136-173-00	FILM	0.47MF	5% 50V	
C1404	1-164-299-11	CERAMIC CHIP	0.22MF	10% 25V	
C1405	1-163-235-11	CERAMIC CHIP	22PF	5% 50V	
C1406	1-163-090-00	CERAMIC CHIP	7PF	0.25PF 50V	
C1407	1-163-085-00	CERAMIC CHIP	2PF	0.25PF 50V	
C1408	1-163-107-00	CERAMIC CHIP	39PF	5% 50V	
C1500	1-124-556-11	ELECT	2200MF	20% 16V	
C1501	1-124-472-11	ELECT	470MF	20% 10V	
C1502	1-101-821-00	CERAMIC	0.0022MF	500V	
C1503	1-164-004-11	CERAMIC CHIP	0.1MF	10% 25V	
C1504	1-124-907-11	ELECT	10MF	20% 50V	
C1505	1-136-165-00	FILM	0.1MF	5% 50V	
C1506	1-124-119-00	ELECT	330MF	20% 16V	
C1507	1-163-141-00	CERAMIC CHIP	0.001MF	5% 50V	
C1508	1-124-927-11	ELECT	4.7MF	20% 50V	
C1509	1-124-907-11	ELECT	10MF	20% 50V	
C1510	1-124-927-11	ELECT	4.7MF	20% 50V	
C1511	1-164-182-11	CERAMIC CHIP	0.0033MF	10% 50V	
C1512	1-124-927-11	ELECT	4.7MF	20% 50V	
C1513	1-163-197-00	CERAMIC CHIP	470PF	5% 50V	
C1514	1-130-477-00	MYLAR	0.0033MF	5% 50V	
C1515	1-124-907-11	ELECT	10MF	20% 50V	
C1516	1-163-063-00	CERAMIC CHIP	0.022MF	10% 50V	
C1517	1-126-101-11	ELECT	100MF	20% 10V	
C1518	1-124-477-11	ELECT	47MF	20% 16V	
C1519	1-163-037-11	CERAMIC CHIP	0.022MF	10% 25V	

REF.NO.	PART NO.	DESCRIPTION			REMARK
C1520	1-162-129-00	CERAMIC	150PF	10%	2KV
C1521	1-163-243-11	CERAMIC CHIP	47PF	5%	50V

<CONNECTOR>

CN101	*1-573-979-11	CONNECTOR, BOARD TO BOARD 11P
CN102	*1-564-514-11	PLUG, CONNECTOR 11P
CN104	*1-564-506-11	PLUG, CONNECTOR 3P
CN105	*1-565-503-11	CONNECTOR, BOARD TO BOARD 12P
CN201	*1-564-506-11	PLUG, CONNECTOR 3P
CN301	*1-564-514-11	PLUG, CONNECTOR 11P
CN302	*1-564-510-11	PLUG, CONNECTOR 7P
CN303	*1-564-515-11	PLUG, CONNECTOR 12P
CN304	*1-564-509-11	PLUG, CONNECTOR 6P
CN305	*1-565-504-11	CONNECTOR, BOARD TO BOARD 13P
CN306	1-564-505-11	PLUG, CONNECTOR 2P
CN401	*1-564-511-11	PLUG, CONNECTOR 8P
CN402	*1-564-515-11	PLUG, CONNECTOR 12P
CN501	*1-580-798-11	CONNECTOR PIN (DY) 6P
CN502	*1-573-964-11	PIN, CONNECTOR (PC BOARD) 6P
CN503	*1-573-964-11	PIN, CONNECTOR (PC BOARD) 6P
CN504	*1-564-508-11	PLUG, CONNECTOR 5P
CN505	*1-564-506-11	PLUG, CONNECTOR 3P
CN507	*1-535-419-00	TAB, FASTEN (PCB)

<COMPOSITION CIRCUIT BLOCK>

CP300	1-236-366-11	MODULE, TRAP
CP301	1-236-365-11	MODULE, TRAP
CP302	1-808-654-21	MODULE
CP303	1-466-162-61	FILTER BLOCK, COM (CFB-4)

<DIODE>

D100	8-719-404-46	DIODE MA110
D101	8-719-800-76	DIODE 1SS226
D102	8-719-800-76	DIODE 1SS226
D103	8-719-045-70	DIODE 1SV230TPH3
D104	8-719-800-76	DIODE 1SS226
D105	8-719-800-76	DIODE 1SS226
D106	8-719-800-76	DIODE 1SS226
D107	8-719-800-76	DIODE 1SS226
D108	8-719-104-34	DIODE 1S2836
D109	8-719-801-78	DIODE 1SS184
D111	8-719-977-05	DIODE DTZ6.2
D113	8-719-159-06	DIODE RD4.7SB-T2
D114	8-719-404-46	DIODE MA110
D115	8-719-977-05	DIODE DTZ6.2
D116	8-719-404-46	DIODE MA110
D200	8-719-977-46	DIODE DTZ13C
D300	8-719-025-07	DIODE 1SV232-TPH3
D301	8-719-404-46	DIODE MA110
D302	8-719-159-06	DIODE RD4.7SB-T2
D303	8-719-977-05	DIODE DTZ6.2
D304	8-719-801-78	DIODE 1SS184
D305	8-719-800-76	DIODE 1SS226
D306	8-719-104-34	DIODE 1S2836
D307	8-719-404-46	DIODE MA110
D308	8-719-404-46	DIODE MA110
D309	8-719-404-46	DIODE MA110
D310	8-719-104-34	DIODE 1S2836
D311	8-719-045-70	DIODE 1SV230TPH3
D313	8-719-801-78	DIODE 1SS184
D314	8-719-404-46	DIODE MA110

A

REF.NO.	PART NO.	DESCRIPTION	REMARK
D315	8-719-404-46	DIODE MA110	
D317	8-719-404-46	DIODE MA110	
D320	8-719-404-46	DIODE MA110	
D322	8-719-404-46	DIODE MA110	
D323	8-719-404-46	DIODE MA110	
D324	8-719-404-46	DIODE MA110	
D325	8-719-801-78	DIODE 1SS184	
D326	8-719-404-46	DIODE MA110	
D327	8-719-104-34	DIODE 1S2836	
D332	8-719-404-46	DIODE MA110	
D333	8-719-404-46	DIODE MA110	
D335	8-719-404-46	DIODE MA110	
D337	8-719-404-46	DIODE MA110	
D338	8-719-404-46	DIODE MA110	
D339	8-719-404-46	DIODE MA110	
D341	8-719-159-06	DIODE RD4.7SB-T2	
D344	8-719-801-78	DIODE 1SS184	
D345	8-719-104-34	DIODE 1S2836	
D346	8-719-104-34	DIODE 1S2836	
D347	8-719-104-34	DIODE 1S2836	
D360	8-719-104-34	DIODE 1S2836	
D361	8-719-104-34	DIODE 1S2836	
D362	8-719-158-40	DIODE RD10SB1	
D363	8-719-158-40	DIODE RD10SB1	
D364	8-719-104-34	DIODE 1S2836	
D365	8-719-404-46	DIODE MA110	
D381	8-719-404-46	DIODE MA110	
D401	8-719-404-46	DIODE MA110	
D404	8-719-800-76	DIODE 1SS226	
D405	8-719-801-78	DIODE 1SS184	
D406	8-719-404-46	DIODE MA110	
D407	8-719-404-46	DIODE MA110	
D408	8-719-404-46	DIODE MA110	
D410	8-719-404-46	DIODE MA110	
D411	8-719-404-46	DIODE MA110	
D414	8-719-801-78	DIODE 1SS184	
D415	8-719-801-78	DIODE 1SS184	
D416	8-719-801-78	DIODE 1SS184	
D417	8-719-801-78	DIODE 1SS184	
D418	8-719-801-78	DIODE 1SS184	
D421	8-719-404-46	DIODE MA110	
D422	8-719-404-46	DIODE MA110	
D423	8-719-800-76	DIODE 1SS226	
D424	8-719-404-46	DIODE MA110	
D425	8-719-800-76	DIODE 1SS226	
D426	8-719-159-06	DIODE RD4.7SB-T2	
D427	8-719-404-46	DIODE MA110	
D500	8-719-404-46	DIODE MA110	
D501	8-719-977-03	DIODE DTZ5.6B	
D502	8-719-979-80	DIODE UF5406	
D503	8-719-404-46	DIODE MA110	
D504	8-719-901-83	DIODE 1SS83	
D505	8-719-028-72	DIODE RGP02-17EL-6433	
D506	8-719-945-80	DIODE ERC06-15S	
D507	8-719-800-76	DIODE 1SS226	
D508	8-719-800-76	DIODE 1SS226	
D509	8-719-404-46	DIODE MA110	
D510	8-719-302-43	DIODE EL1Z	
D512	8-719-979-80	DIODE UF5406	
D513	8-719-404-46	DIODE MA110	
D514	8-719-971-20	DIODE ERC38-06	
D515	8-719-971-20	DIODE ERC38-06	
D516	8-719-404-46	DIODE MA110	
D517	8-719-404-46	DIODE MA110	
D518	8-719-404-46	DIODE MA110	
D519	8-719-404-46	DIODE MA110	
D520	8-719-801-78	DIODE 1SS184	
D521	8-719-404-46	DIODE MA110	
D522	8-719-977-05	DIODE DTZ6.2	
D523	8-719-404-46	DIODE MA110	
D524	8-719-200-02	DIODE 10E-2	
D525	8-719-200-02	DIODE 10E-2	
D526	8-719-404-46	DIODE MA110	
D527	8-719-200-02	DIODE 10E-2	
D528	8-719-300-76	DIODE RH-1A	
D529	8-719-200-02	DIODE 10E-2	
D530	8-719-300-76	DIODE RH-1A	
D531	8-719-977-32	DIODE DTZ11B	
D532	8-719-800-76	DIODE 1SS226	
D533	8-719-302-43	DIODE EL1Z	
D534	8-719-404-46	DIODE MA110	
D535	8-719-404-46	DIODE MA110	
D536	8-719-800-76	DIODE 1SS226	
D537	8-719-800-76	DIODE 1SS226	
D538	8-719-800-76	DIODE 1SS226	
D539	8-719-404-46	DIODE MA110	
D540	8-719-404-46	DIODE MA110	
D541	8-719-801-78	DIODE 1SS184	
D542	8-719-404-46	DIODE MA110	
D543	8-719-911-19	DIODE 1SS119-25	
		<DELAY LINE>	
DL300	1-415-633-11	DELAY LINE, Y	
DL301	1-415-632-11	DELAY LINE, Y	
DL401	1-409-547-11	DELAY LINE	
		<FILTER>	
FL300	1-236-547-11	TRAP, LC	
FL401	1-236-364-11	FILTER, BAND PASS	
		<IC>	
IC101	8-759-287-40	IC UPD78013YCW-Y04	
IC102	8-759-280-74	IC ST24C02CB1	
IC103	8-759-008-48	IC MC74HC86F	
IC104	8-759-262-59	IC UPD6451AGT-632-E2	
IC105	8-759-196-70	IC M62358FP-E1	
IC106	8-759-196-70	IC M62358FP-E1	
IC107	8-759-196-70	IC M62358FP-E1	
IC108	8-759-042-02	IC S-80743AL-A7-S	
IC109	8-759-196-70	IC M62358FP-E1	
IC110	8-759-196-70	IC M62358FP-E1	
IC111	8-759-009-22	IC MC14094BF	
IC200	8-759-420-04	IC AN5265	
IC301	8-752-053-21	IC CXA1211M	
IC302	8-759-998-98	IC LM358D	
IC303	8-759-926-98	IC SN74HC4040ANS	
IC304	8-759-932-67	IC BU4053BCF	
IC305	8-759-631-08	IC M51279FP	
IC306	8-759-711-32	IC NJM2245M	
IC307	8-759-509-05	IC XRU4066BCF	
IC309	8-759-711-32	IC NJM2245M	
IC310	8-759-932-67	IC BU4053BCF	
IC311	8-759-008-67	IC MC14066BF	
IC312	8-759-711-32	IC NJM2245M	

A

The components identified by shading and mark ⚠ are critical for safety.
Replace only with part number specified.

Les composants identifies par une trame et une marque ⚠ sont critiques pour la securite.
Ne les remplacer que par une piece portant le numero specifie.

REF.NO.	PART NO.	DESCRIPTION	REMARK
IC313	8-759-287-89	IC MM1113XFF	
IC314	8-759-287-89	IC MM1113XFF	
IC315	8-759-932-67	IC BU4053BCF	
IC316	8-759-084-76	IC MM1111XF	
IC317	8-759-009-51	IC MC14538BF	
IC318	8-759-009-67	IC MC14584BF	
IC319	8-759-509-05	IC XRU4066BCF	
IC320	8-759-287-89	IC MM1113XFF	
IC321	8-759-287-89	IC MM1113XFF	
IC322	8-759-287-89	IC MM1113XFF	
IC323	8-759-287-89	IC MM1113XFF	
IC324	8-759-287-89	IC MM1113XFF	
IC325	8-759-287-89	IC MM1113XFF	
IC326	8-759-060-00	IC BA10324AF	
IC327	8-759-084-76	IC MM1111XF	
IC350	8-759-100-96	IC UPC4558G2	
IC401	8-759-196-69	IC BA7655AF-E2	
IC402	8-752-053-21	IC CXA1211M	
IC403	8-759-008-67	IC MC14066BF	
IC404	8-752-052-62	IC CXA1478S	
IC405	8-759-932-67	IC BU4053BCF	
IC406	8-759-998-98	IC LM358D	
IC407	8-759-008-67	IC MC14066BF	
IC408	8-759-509-91	IC XRA10393F	
IC409	8-759-060-00	IC BA10324AF	
IC410	8-759-009-06	IC MC14052BF	
IC411	8-759-008-92	IC MC14024BF	
IC412	8-759-932-67	IC BU4053BCF	
IC413	8-759-932-67	IC BU4053BCF	
IC500	8-749-010-08	IC H8D7249	
IC502	8-759-009-51	IC MC14538BF	
IC503	8-759-009-51	IC MC14538BF	
IC504	8-752-053-21	IC CXA1211M	
IC505	8-759-520-07	IC XRA17812T	
IC506	8-759-009-51	IC MC14538BF	
IC507	8-759-100-60	IC UPC1377C	
IC508	8-752-053-21	IC CXA1211M	
IC509	8-759-998-98	IC LM358D	
IC510	8-759-009-51	IC MC14538BF	
		<CONDCTOR CHIP>	
JR302	1-216-295-91	CONDCTOR, CHIP	
		<COIL>	
L101	1-408-609-41	INDUCTOR 33UH	
L102	1-408-417-00	INDUCTOR 47UH	
L104	1-408-425-00	INDUCTOR 220UH	
L105	1-410-482-31	INDUCTOR 100UH	
L300	1-410-478-11	INDUCTOR 47UH	
L305	1-410-196-11	INDUCTOR CHIP 2.2UH	
L308	1-410-466-41	INDUCTOR 4.7UH	
L309	1-410-470-11	INDUCTOR 10UH	
L311	1-410-470-11	INDUCTOR 10UH	
L312	1-412-011-31	INDUCTOR CHIP 27UH	
L314	1-412-011-31	INDUCTOR CHIP 27UH	
L316	1-412-011-31	INDUCTOR CHIP 27UH	
L317	1-410-090-41	INDUCTOR 18MMH	
L319	1-408-421-00	INDUCTOR 100UH	
L320	1-410-682-31	INDUCTOR 470UH	
L401	1-410-478-11	INDUCTOR 47UH	
L402	1-410-215-31	INDUCTOR CHIP 82UH	
L403	1-410-215-31	INDUCTOR CHIP 82UH	
L404	1-410-215-31	INDUCTOR CHIP 82UH	
L405	1-408-419-00	INDUCTOR 68UH	
L406	1-408-419-00	INDUCTOR 68UH	
L407	1-408-413-00	INDUCTOR 22UH	
L408	1-408-413-00	INDUCTOR 22UH	
L409	1-410-215-31	INDUCTOR CHIP 82UH	
L500	1-459-155-00	COIL (WITH CORE) 45UH	
L501	1-407-365-00	COIL,CHOKE	
L502	1-407-365-00	COIL,CHOKE	
L503	1-410-093-11	INDUCTOR 33MMH	
L504	1-410-666-31	INDUCTOR 18UH	
L505	1-410-671-31	INDUCTOR 47UH	
L506	1-459-104-00	COIL, DUST CORE	
L507	1-410-686-11	INDUCTOR 1MMH	
L508	1-412-530-31	INDUCTOR 27UH	
L509	1-459-087-00	COIL,HCC DUST CORE 3.9MMH	
L510	1-459-106-00	COIL,DUST CORE	
L512 ⚠	1-459-232-11	COIL, CORE	
L513	1-412-447-11	INDUCTOR 3.9MMH	
L514	1-459-104-00	COIL, DUST CORE	
L515	1-459-059-00	COIL,DUST CORE	
L517	1-412-547-21	INDUCTOR 680UH	
		<NEON LAMP>	
NL500	1-519-526-11	LAMP, NEON	
		<TRANSISTOR>	
Q101	8-729-901-01	TRANSISTOR DTC144EK	
Q102	8-729-216-22	TRANSISTOR 2SA1162-G	
Q103	8-729-216-22	TRANSISTOR 2SA1162-G	
Q104	8-729-907-26	TRANSISTOR IMX1	
Q105	8-729-901-06	TRANSISTOR DTA144EK	
Q107	8-729-901-06	TRANSISTOR DTA144EK	
Q108	8-729-422-29	TRANSISTOR 2SD601A-S	
Q109	8-729-422-29	TRANSISTOR 2SD601A-S	
Q110	8-729-422-29	TRANSISTOR 2SD601A-S	
Q111	8-729-901-06	TRANSISTOR DTA144EK	
Q112	8-729-422-29	TRANSISTOR 2SD601A-S	
Q113	8-729-422-29	TRANSISTOR 2SD601A-S	
Q114	8-729-120-28	TRANSISTOR 2SC1623-L5L6	
Q115	8-729-120-28	TRANSISTOR 2SC1623-L5L6	
Q200	8-729-140-96	TRANSISTOR 2SD774-34	
Q201	8-729-422-29	TRANSISTOR 2SD601A-S	
Q300	8-729-422-29	TRANSISTOR 2SD601A-S	
Q301	8-729-422-29	TRANSISTOR 2SD601A-S	
Q302	8-729-422-37	TRANSISTOR 2SB709A-R	
Q303	8-729-422-29	TRANSISTOR 2SD601A-S	
Q305	8-729-422-29	TRANSISTOR 2SD601A-S	
Q306	8-729-422-29	TRANSISTOR 2SD601A-S	
Q307	8-729-422-29	TRANSISTOR 2SD601A-S	
Q308	8-729-422-29	TRANSISTOR 2SD601A-S	
Q309	8-729-422-37	TRANSISTOR 2SB709A-R	
Q310	8-729-422-37	TRANSISTOR 2SB709A-R	
Q311	8-729-422-37	TRANSISTOR 2SB709A-R	
Q312	8-729-422-29	TRANSISTOR 2SD601A-S	
Q313	8-729-422-37	TRANSISTOR 2SB709A-R	
Q314	8-729-901-06	TRANSISTOR DTA144EK	
Q315	8-729-422-37	TRANSISTOR 2SB709A-R	
Q316	8-729-422-29	TRANSISTOR 2SD601A-S	
Q318	8-729-422-37	TRANSISTOR 2SB709A-R	
Q319	8-729-422-29	TRANSISTOR 2SD601A-S	
Q320	8-729-120-28	TRANSISTOR 2SC1623-L5L6	

A

REF.NO.	PART NO.	DESCRIPTION	REMARK
Q321	8-729-422-29	TRANSISTOR 2SD601A-S	
Q322	8-729-422-29	TRANSISTOR 2SD601A-S	
Q323	8-729-901-01	TRANSISTOR DTC144EK	
Q324	8-729-901-01	TRANSISTOR DTC144EK	
Q325	8-729-422-29	TRANSISTOR 2SD601A-S	
Q326	8-729-422-29	TRANSISTOR 2SD601A-S	
Q327	8-729-422-37	TRANSISTOR 2SB709A-R	
Q328	8-729-141-53	TRANSISTOR 2SK94-X2X3X4	
Q329	8-729-141-53	TRANSISTOR 2SK94-X2X3X4	
Q330	8-729-422-37	TRANSISTOR 2SB709A-R	
Q331	8-729-422-37	TRANSISTOR 2SB709A-R	
Q332	8-729-901-01	TRANSISTOR DTC144EK	
Q333	8-729-422-29	TRANSISTOR 2SD601A-S	
Q335	8-729-422-29	TRANSISTOR 2SD601A-S	
Q338	8-729-422-29	TRANSISTOR 2SD601A-S	
Q339	8-729-422-37	TRANSISTOR 2SB709A-R	
Q341	8-729-920-39	TRANSISTOR IMT1US	
Q342	8-729-920-39	TRANSISTOR IMT1US	
Q343	8-729-920-39	TRANSISTOR IMT1US	
Q345	8-729-422-29	TRANSISTOR 2SD601A-S	
Q350	8-729-422-37	TRANSISTOR 2SB709A-R	
Q351	8-729-422-29	TRANSISTOR 2SD601A-S	
Q352	8-729-422-29	TRANSISTOR 2SD601A-S	
Q353	8-729-422-29	TRANSISTOR 2SD601A-S	
Q354	8-729-422-29	TRANSISTOR 2SD601A-S	
Q355	8-729-422-29	TRANSISTOR 2SD601A-S	
Q356	8-729-901-01	TRANSISTOR DTC144EK	
Q357	8-729-422-29	TRANSISTOR 2SD601A-S	
Q358	8-729-422-29	TRANSISTOR 2SD601A-S	
Q359	8-729-422-37	TRANSISTOR 2SB709A-R	
Q360	8-729-907-26	TRANSISTOR IMX1	
Q361	8-729-901-06	TRANSISTOR DTA144EK	
Q362	8-729-422-29	TRANSISTOR 2SD601A-S	
Q363	8-729-422-29	TRANSISTOR 2SD601A-S	
Q364	8-729-901-01	TRANSISTOR DTC144EK	
Q366	8-729-422-37	TRANSISTOR 2SB709A-R	
Q367	8-729-422-37	TRANSISTOR 2SB709A-R	
Q368	8-729-422-37	TRANSISTOR 2SB709A-R	
Q369	8-729-901-06	TRANSISTOR DTA144EK	
Q372	8-729-901-01	TRANSISTOR DTC144EK	
Q373	8-729-216-22	TRANSISTOR 2SA1162-G	
Q374	8-729-216-22	TRANSISTOR 2SA1162-G	
Q375	8-729-216-22	TRANSISTOR 2SA1162-G	
Q376	8-729-901-01	TRANSISTOR DTC144EK	
Q377	8-729-901-06	TRANSISTOR DTA144EK	
Q378	8-729-901-01	TRANSISTOR DTC144EK	
Q380	8-729-901-01	TRANSISTOR DTC144EK	
Q381	8-729-901-01	TRANSISTOR DTC144EK	
Q382	8-729-901-01	TRANSISTOR DTC144EK	
Q383	8-729-901-01	TRANSISTOR DTC144EK	
Q384	8-729-901-01	TRANSISTOR DTC144EK	
Q385	8-729-901-01	TRANSISTOR DTC144EK	
Q386	8-729-901-01	TRANSISTOR DTC144EK	
Q401	8-729-422-29	TRANSISTOR 2SD601A-S	
Q402	8-729-422-29	TRANSISTOR 2SD601A-S	
Q403	8-729-901-01	TRANSISTOR DTC144EK	
Q404	8-729-422-37	TRANSISTOR 2SB709A-R	
Q405	8-729-422-37	TRANSISTOR 2SB709A-R	
Q406	8-729-422-29	TRANSISTOR 2SD601A-S	
Q407	8-729-422-29	TRANSISTOR 2SD601A-S	
Q408	8-729-422-37	TRANSISTOR 2SB709A-R	
Q409	8-729-422-37	TRANSISTOR 2SB709A-R	
Q410	8-729-907-26	TRANSISTOR IMX1	
Q411	8-729-422-29	TRANSISTOR 2SD601A-S	
Q412	8-729-216-22	TRANSISTOR 2SA1162-G	
Q413	8-729-141-53	TRANSISTOR 2SK94-X2X3X4	
Q414	8-729-422-37	TRANSISTOR 2SB709A-R	
Q415	8-729-422-37	TRANSISTOR 2SB709A-R	
Q416	8-729-422-37	TRANSISTOR 2SB709A-R	
Q417	8-729-422-37	TRANSISTOR 2SB709A-R	
Q418	8-729-120-28	TRANSISTOR 2SC1623-L5L6	
Q419	8-729-422-37	TRANSISTOR 2SB709A-R	
Q420	8-729-422-37	TRANSISTOR 2SB709A-R	
Q421	8-729-901-01	TRANSISTOR DTC144EK	
Q422	8-729-120-28	TRANSISTOR 2SC1623-L5L6	
Q423	8-729-422-29	TRANSISTOR 2SD601A-S	
Q424	8-729-901-01	TRANSISTOR DTC144EK	
Q425	8-729-901-01	TRANSISTOR DTC144EK	
Q426	8-729-901-01	TRANSISTOR DTC144EK	
Q428	8-729-422-37	TRANSISTOR 2SB709A-R	
Q429	8-729-422-37	TRANSISTOR 2SB709A-R	
Q430	8-729-422-29	TRANSISTOR 2SD601A-S	
Q431	8-729-422-29	TRANSISTOR 2SD601A-S	
Q432	8-729-422-29	TRANSISTOR 2SD601A-S	
Q433	8-729-901-01	TRANSISTOR DTC144EK	
Q434	8-729-422-29	TRANSISTOR 2SD601A-S	
Q435	8-729-901-01	TRANSISTOR DTC144EK	
Q436	8-729-901-01	TRANSISTOR DTC144EK	
Q437	8-729-901-01	TRANSISTOR DTC144EK	
Q438	8-729-422-29	TRANSISTOR 2SD601A-S	
Q439	8-729-216-22	TRANSISTOR 2SA1162-G	
Q440	8-729-422-29	TRANSISTOR 2SD601A-S	
Q441	8-729-141-53	TRANSISTOR 2SK94-X2X3X4	
Q442	8-729-422-29	TRANSISTOR 2SD601A-S	
Q443	8-729-216-22	TRANSISTOR 2SA1162-G	
Q444	8-729-422-29	TRANSISTOR 2SD601A-S	
Q445	8-729-901-01	TRANSISTOR DTC144EK	
Q500	8-729-422-37	TRANSISTOR 2SB709A-R	
Q501	8-729-821-87	TRANSISTOR 2SD1878-CA	
Q502	8-729-119-80	TRANSISTOR 2SC2688-LK	
Q503	8-729-313-42	TRANSISTOR 2SD1134-C	
Q505	8-729-422-29	TRANSISTOR 2SD601A-S	
Q506	8-729-422-29	TRANSISTOR 2SD601A-S	
Q507	8-729-422-29	TRANSISTOR 2SD601A-S	
Q508	8-729-422-37	TRANSISTOR 2SB709A-R	
Q509	8-729-901-06	TRANSISTOR DTA144EK	
Q510	8-729-901-01	TRANSISTOR DTC144EK	
Q511	8-729-422-29	TRANSISTOR 2SD601A-S	
Q512	8-729-195-82	TRANSISTOR 2SC2958-L	
Q513	8-729-122-03	TRANSISTOR 2SA1220A-P	
Q514	8-729-901-00	TRANSISTOR DTC124EK	
Q515	8-729-169-02	TRANSISTOR 2SC2690A-Q	
Q517	8-729-901-06	TRANSISTOR DTA144EK	
Q518	8-729-901-01	TRANSISTOR DTC144EK	
Q519	8-729-901-01	TRANSISTOR DTC144EK	
Q520	8-729-021-82	TRANSISTOR 2SD2396K	
Q522	8-729-422-29	TRANSISTOR 2SD601A-S	
Q523	8-729-422-29	TRANSISTOR 2SD601A-S	
Q524	8-729-119-78	TRANSISTOR 2SC2785-HFE	
Q525	8-729-119-76	TRANSISTOR 2SA1175-HFE	
Q526	8-729-422-37	TRANSISTOR 2SB709A-R	
Q527	8-729-422-29	TRANSISTOR 2SD601A-S	

<RESISTOR>

R101	1-216-025-91	METAL GLAZE	100	5%	1/10W
R102	1-216-025-91	METAL GLAZE	100	5%	1/10W

A

REF.NO.	PART NO.	DESCRIPTION				REMARK
R103	1-216-025-91	METAL GLAZE	100	5%	1/10W	
R104	1-216-073-00	METAL GLAZE	10K	5%	1/10W	
R105	1-216-059-00	METAL GLAZE	2.7K	5%	1/10W	
R106	1-216-065-00	METAL GLAZE	4.7K	5%	1/10W	
R107	1-216-065-00	METAL GLAZE	4.7K	5%	1/10W	
R108	1-216-065-00	METAL GLAZE	4.7K	5%	1/10W	
R109	1-216-065-00	METAL GLAZE	4.7K	5%	1/10W	
R110	1-216-073-00	METAL GLAZE	10K	5%	1/10W	
R113	1-216-085-00	METAL GLAZE	33K	5%	1/10W	
R116	1-218-761-11	METAL CHIP	240K	0.50%	1/10W	
R117	1-216-089-00	METAL GLAZE	47K	5%	1/10W	
R119	1-216-689-11	METAL GLAZE	39K	5%	1/10W	
R124	1-216-295-91	CONDCTOR, CHIP				
R130	1-216-099-00	METAL GLAZE	120K	5%	1/10W	
R132	1-216-065-00	METAL GLAZE	4.7K	5%	1/10W	
R133	1-216-091-00	METAL GLAZE	56K	5%	1/10W	
R134	1-216-065-00	METAL GLAZE	4.7K	5%	1/10W	
R135	1-216-085-00	METAL GLAZE	33K	5%	1/10W	
R137	1-216-065-00	METAL GLAZE	4.7K	5%	1/10W	
R140	1-216-033-00	METAL GLAZE	220	5%	1/10W	
R141	1-216-085-00	METAL GLAZE	33K	5%	1/10W	
R144	1-216-295-91	CONDCTOR, CHIP				
R149	1-216-065-00	METAL GLAZE	4.7K	5%	1/10W	
R151	1-216-061-00	METAL GLAZE	3.3K	5%	1/10W	
R154	1-216-065-00	METAL GLAZE	4.7K	5%	1/10W	
R157	1-216-065-00	METAL GLAZE	4.7K	5%	1/10W	
R158	1-216-295-91	CONDCTOR, CHIP				
R159	1-216-063-00	METAL GLAZE	3.9K	5%	1/10W	
R160	1-216-061-00	METAL GLAZE	3.3K	5%	1/10W	
R161	1-216-089-00	METAL GLAZE	47K	5%	1/10W	
R162	1-216-065-00	METAL GLAZE	4.7K	5%	1/10W	
R163	1-216-065-00	METAL GLAZE	4.7K	5%	1/10W	
R164	1-216-067-00	METAL GLAZE	5.6K	5%	1/10W	
R165	1-216-295-91	CONDCTOR, CHIP				
R167	1-216-061-00	METAL GLAZE	3.3K	5%	1/10W	
R168	1-216-085-00	METAL GLAZE	33K	5%	1/10W	
R169	1-216-107-00	METAL GLAZE	270K	5%	1/10W	
R171	1-216-031-00	METAL GLAZE	180	5%	1/10W	
R172	1-216-295-91	CONDCTOR, CHIP				
R176	1-216-089-00	METAL GLAZE	47K	5%	1/10W	
R177	1-216-065-00	METAL GLAZE	4.7K	5%	1/10W	
R178	1-216-089-00	METAL GLAZE	47K	5%	1/10W	
R181	1-216-065-00	METAL GLAZE	4.7K	5%	1/10W	
R184	1-216-649-11	METAL CHIP	820	0.50%	1/10W	
R185	1-216-073-00	METAL GLAZE	10K	5%	1/10W	
R187	1-216-061-00	METAL GLAZE	3.3K	5%	1/10W	
R189	1-216-073-00	METAL GLAZE	10K	5%	1/10W	
R190	1-216-049-91	METAL GLAZE	1K	5%	1/10W	
R192	1-216-073-00	METAL GLAZE	10K	5%	1/10W	
R195	1-216-071-00	METAL GLAZE	8.2K	5%	1/10W	
R197	1-216-061-00	METAL GLAZE	3.3K	5%	1/10W	
R199	1-216-295-91	CONDCTOR, CHIP				
R200	1-208-817-11	METAL CHIP	30K	0.50%	1/10W	
R201	1-216-049-91	METAL GLAZE	1K	5%	1/10W	
R202	1-212-857-00	FUSIBLE	10	5%	1/4W	F
R203	1-260-095-11	CARBON	470	5%	1/2W	
R204	1-260-072-11	CARBON	4.7	5%	1/2W	
R205	1-216-647-11	METAL CHIP	680	0.50%	1/10W	
R206	1-216-073-00	METAL GLAZE	10K	5%	1/10W	
R207	1-216-065-00	METAL GLAZE	4.7K	5%	1/10W	
R208	1-216-065-00	METAL GLAZE	4.7K	5%	1/10W	
R209	1-216-073-00	METAL GLAZE	10K	5%	1/10W	
R210	1-216-061-00	METAL GLAZE	3.3K	5%	1/10W	
R211	1-249-393-11	CARBON	10	5%	1/4W	F
R237	1-216-089-00	METAL GLAZE	47K	5%	1/10W	
R302	1-216-025-91	METAL GLAZE	100	5%	1/10W	
R304	1-216-025-91	METAL GLAZE	100	5%	1/10W	
R307	1-216-115-00	METAL GLAZE	560K	5%	1/10W	
R308	1-216-065-00	METAL GLAZE	4.7K	5%	1/10W	
R311	1-216-055-00	METAL GLAZE	1.8K	5%	1/10W	
R312	1-216-073-00	METAL GLAZE	10K	5%	1/10W	
R313	1-216-649-11	METAL CHIP	820	0.50%	1/10W	
R314	1-216-099-00	METAL GLAZE	120K	5%	1/10W	
R315	1-216-099-00	METAL GLAZE	120K	5%	1/10W	
R316	1-216-049-91	METAL GLAZE	1K	5%	1/10W	
R317	1-216-057-00	METAL GLAZE	2.2K	5%	1/10W	
R318	1-216-049-91	METAL GLAZE	1K	5%	1/10W	
R320	1-216-057-00	METAL GLAZE	2.2K	5%	1/10W	
R321	1-216-051-00	METAL GLAZE	1.2K	5%	1/10W	
R322	1-216-035-00	METAL GLAZE	270	5%	1/10W	
R323	1-216-109-00	METAL GLAZE	330K	5%	1/10W	
R324	1-216-101-00	METAL GLAZE	150K	5%	1/10W	
R325	1-216-037-00	METAL GLAZE	330	5%	1/10W	
R326	1-216-033-00	METAL GLAZE	220	5%	1/10W	
R328	1-216-121-00	METAL GLAZE	1M	5%	1/10W	
R329	1-216-055-00	METAL GLAZE	1.8K	5%	1/10W	
R330	1-216-089-00	METAL GLAZE	47K	5%	1/10W	
R331	1-216-093-00	METAL GLAZE	68K	5%	1/10W	
R332	1-216-097-00	METAL GLAZE	100K	5%	1/10W	
R333	1-216-097-00	METAL GLAZE	100K	5%	1/10W	
R334	1-216-093-00	METAL GLAZE	68K	5%	1/10W	
R335	1-216-083-00	METAL GLAZE	27K	5%	1/10W	
R336	1-216-065-00	METAL GLAZE	4.7K	5%	1/10W	
R342	1-216-065-00	METAL GLAZE	4.7K	5%	1/10W	
R345	1-216-063-00	METAL GLAZE	3.9K	5%	1/10W	
R346	1-216-057-00	METAL GLAZE	2.2K	5%	1/10W	
R349	1-216-694-11	METAL CHIP	62K	0.50%	1/10W	
R350	1-216-085-00	METAL GLAZE	33K	5%	1/10W	
R351	1-216-061-00	METAL GLAZE	3.3K	5%	1/10W	
R354	1-216-119-00	METAL GLAZE	820K	5%	1/10W	
R357	1-216-121-00	METAL GLAZE	1M	5%	1/10W	
R366	1-216-065-00	METAL GLAZE	4.7K	5%	1/10W	
R371	1-216-025-91	METAL GLAZE	100	5%	1/10W	
R372	1-216-073-00	METAL GLAZE	10K	5%	1/10W	
R373	1-216-645-11	METAL CHIP	560	0.50%	1/10W	
R374	1-216-647-11	METAL CHIP	680	0.50%	1/10W	
R375	1-216-073-00	METAL GLAZE	10K	5%	1/10W	
R376	1-216-111-00	METAL GLAZE	390K	5%	1/10W	
R378	1-216-114-00	METAL GLAZE	510K	5%	1/10W	
R379	1-216-067-00	METAL GLAZE	5.6K	5%	1/10W	
R380	1-216-065-00	METAL GLAZE	4.7K	5%	1/10W	
R381	1-216-689-11	METAL GLAZE	39K	5%	1/10W	
R382	1-216-101-00	METAL GLAZE	150K	5%	1/10W	
R386	1-216-091-00	METAL GLAZE	56K	5%	1/10W	
R387	1-216-029-00	METAL GLAZE	150	5%	1/10W	
R388	1-216-039-00	METAL GLAZE	390	5%	1/10W	
R389	1-216-649-11	METAL CHIP	820	0.50%	1/10W	
R390	1-249-393-11	CARBON	10	5%	1/4W	F
R393	1-216-073-00	METAL GLAZE	10K	5%	1/10W	
R394	1-216-083-00	METAL GLAZE	27K	5%	1/10W	
R395	1-216-651-11	METAL CHIP	1K	0.50%	1/10W	
R397	1-216-113-00	METAL GLAZE	470K	5%	1/10W	
R398	1-216-105-91	METAL GLAZE	220K	5%	1/10W	
R399	1-216-111-00	METAL GLAZE	390K	5%	1/10W	
R400	1-216-113-00	METAL GLAZE	470K	5%	1/10W	
R401	1-216-053-00	METAL GLAZE	1.5K	5%	1/10W	
R402	1-216-053-00	METAL GLAZE	1.5K	5%	1/10W	

A

REF.NO.	PART NO.	DESCRIPTION				REMARK
R403	1-216-069-00	METAL GLAZE	6.8K	5%	1/10W	
R404	1-216-029-00	METAL GLAZE	150	5%	1/10W	
R405	1-216-121-00	METAL GLAZE	1M	5%	1/10W	
R406	1-216-083-00	METAL GLAZE	27K	5%	1/10W	
R407	1-216-085-00	METAL GLAZE	33K	5%	1/10W	
R408	1-216-689-11	METAL CHIP	39K	0.50%	1/10W	
R410	1-216-069-00	METAL GLAZE	6.8K	5%	1/10W	
R411	1-216-033-00	METAL GLAZE	220	5%	1/10W	
R412	1-216-089-00	METAL GLAZE	47K	5%	1/10W	
R413	1-216-121-00	METAL GLAZE	1M	5%	1/10W	
R414	1-216-073-00	METAL GLAZE	10K	5%	1/10W	
R416	1-216-113-00	METAL GLAZE	470K	5%	1/10W	
R417	1-216-665-11	METAL CHIP	3.9K	0.50%	1/10W	
R418	1-216-667-11	METAL CHIP	4.7K	0.50%	1/10W	
R420	1-216-105-91	METAL GLAZE	220K	5%	1/10W	
R422	1-216-073-00	METAL GLAZE	10K	5%	1/10W	
R423	1-216-073-00	METAL GLAZE	10K	5%	1/10W	
R424	1-216-033-00	METAL GLAZE	220	5%	1/10W	
R425	1-216-049-91	METAL GLAZE	1K	5%	1/10W	
R426	1-216-039-00	METAL GLAZE	390	5%	1/10W	
R427	1-216-033-00	METAL GLAZE	220	5%	1/10W	
R428	1-216-097-00	METAL GLAZE	100K	5%	1/10W	
R429	1-216-073-00	METAL GLAZE	10K	5%	1/10W	
R430	1-216-119-00	METAL GLAZE	820K	5%	1/10W	
R431	1-216-097-00	METAL GLAZE	100K	5%	1/10W	
R432	1-216-089-00	METAL GLAZE	47K	5%	1/10W	
R434	1-216-109-00	METAL GLAZE	330K	5%	1/10W	
R435	1-216-105-91	METAL GLAZE	220K	5%	1/10W	
R436	1-216-113-00	METAL GLAZE	470K	5%	1/10W	
R437	1-216-097-00	METAL GLAZE	100K	5%	1/10W	
R438	1-216-053-00	METAL GLAZE	1.5K	5%	1/10W	
R439	1-216-033-00	METAL GLAZE	220	5%	1/10W	
R440	1-216-049-91	METAL GLAZE	1K	5%	1/10W	
R441	1-216-645-11	METAL CHIP	560	0.50%	1/10W	
R442	1-216-647-11	METAL CHIP	680	0.50%	1/10W	
R443	1-216-049-91	METAL GLAZE	1K	5%	1/10W	
R444	1-216-105-91	METAL GLAZE	220K	5%	1/10W	
R445	1-216-095-00	METAL GLAZE	82K	5%	1/10W	
R447	1-216-069-00	METAL GLAZE	6.8K	5%	1/10W	
R448	1-216-049-91	METAL GLAZE	1K	5%	1/10W	
R449	1-216-073-00	METAL GLAZE	10K	5%	1/10W	
R450	1-216-121-00	METAL GLAZE	1M	5%	1/10W	
R451	1-216-037-00	METAL GLAZE	330	5%	1/10W	
R452	1-216-651-11	METAL CHIP	1K	0.50%	1/10W	
R453	1-216-097-00	METAL GLAZE	100K	5%	1/10W	
R455	1-216-085-00	METAL GLAZE	33K	5%	1/10W	
R456	1-216-053-00	METAL GLAZE	1.5K	5%	1/10W	
R457	1-216-025-91	METAL GLAZE	100	5%	1/10W	
R458	1-216-113-00	METAL GLAZE	470K	5%	1/10W	
R459	1-216-649-11	METAL CHIP	820	0.50%	1/10W	
R460	1-216-295-91	CONDCTOR, CHIP				
R462	1-216-651-11	METAL CHIP	1K	0.50%	1/10W	
R463	1-216-063-00	METAL GLAZE	3.9K	5%	1/10W	
R464	1-216-065-00	METAL GLAZE	4.7K	5%	1/10W	
R465	1-216-025-91	METAL GLAZE	100	5%	1/10W	
R466	1-216-077-00	METAL GLAZE	15K	5%	1/10W	
R467	1-216-121-00	METAL GLAZE	1M	5%	1/10W	
R468	1-216-105-91	METAL GLAZE	220K	5%	1/10W	
R469	1-216-063-00	METAL GLAZE	3.9K	5%	1/10W	
R470	1-216-069-00	METAL GLAZE	6.8K	5%	1/10W	
R471	1-216-109-00	METAL GLAZE	330K	5%	1/10W	
R472	1-216-077-00	METAL GLAZE	15K	5%	1/10W	
R473	1-216-121-00	METAL GLAZE	1M	5%	1/10W	
R474	1-216-649-11	METAL CHIP	820	0.50%	1/10W	
R475	1-216-025-91	METAL GLAZE	100	5%	1/10W	
R476	1-216-061-00	METAL GLAZE	3.3K	5%	1/10W	
R477	1-216-061-00	METAL GLAZE	3.3K	5%	1/10W	
R478	1-216-073-00	METAL GLAZE	10K	5%	1/10W	
R479	1-216-085-00	METAL GLAZE	33K	5%	1/10W	
R480	1-216-077-00	METAL GLAZE	15K	5%	1/10W	
R481	1-216-033-00	METAL GLAZE	220	5%	1/10W	
R482	1-216-057-00	METAL GLAZE	2.2K	5%	1/10W	
R483	1-216-025-91	METAL GLAZE	100	5%	1/10W	
R484	1-216-651-11	METAL CHIP	1K	0.50%	1/10W	
R485	1-216-033-00	METAL GLAZE	220	5%	1/10W	
R486	1-208-812-11	METAL CHIP	18K	0.50%	1/10W	
R487	1-208-784-11	METAL CHIP	1.2K	0.50%	1/10W	
R488	1-216-073-00	METAL GLAZE	10K	5%	1/10W	
R489	1-216-077-00	METAL GLAZE	15K	5%	1/10W	
R490	1-216-057-00	METAL GLAZE	2.2K	5%	1/10W	
R491	1-216-063-00	METAL GLAZE	3.9K	5%	1/10W	
R492	1-216-085-00	METAL GLAZE	33K	5%	1/10W	
R494	1-216-085-00	METAL GLAZE	33K	5%	1/10W	
R495	1-216-651-11	METAL CHIP	1K	0.50%	1/10W	
R496	1-216-073-00	METAL GLAZE	10K	5%	1/10W	
R497	1-208-784-11	METAL CHIP	1.2K	0.50%	1/10W	
R498	1-216-063-00	METAL GLAZE	3.9K	5%	1/10W	
R499	1-216-033-00	METAL GLAZE	220	5%	1/10W	
R500	1-216-689-11	METAL GLAZE	39K	5%	1/10W	
R501	1-216-077-00	METAL GLAZE	15K	5%	1/10W	
R502	1-216-677-11	METAL CHIP	12K	0.50%	1/10W	
R503	1-249-430-11	CARBON	12K	5%	1/4W	
R504	1-216-111-00	METAL GLAZE	390K	5%	1/10W	
R505	1-216-067-00	METAL GLAZE	5.6K	5%	1/10W	
R506	1-216-073-00	METAL GLAZE	10K	5%	1/10W	
R507	1-216-083-00	METAL GLAZE	27K	5%	1/10W	
R508	1-216-105-91	METAL GLAZE	220K	5%	1/10W	
R509	1-216-089-00	METAL GLAZE	47K	5%	1/10W	
R510	1-216-097-00	METAL GLAZE	100K	5%	1/10W	
R511	1-216-099-00	METAL GLAZE	120K	5%	1/10W	
R512	1-216-055-00	METAL GLAZE	1.8K	5%	1/10W	
R513	1-216-295-91	CONDCTOR, CHIP				
R514	1-216-295-91	CONDCTOR, CHIP				
R515	1-208-806-11	METAL CHIP	10K	0.50%	1/10W	
R516	1-216-097-00	METAL GLAZE	100K	5%	1/10W	
R517	1-214-896-81	METAL	20K	1%	1/2W	
R518	1-260-123-11	CARBON	100K	5%	1/2W	
R519	1-216-017-00	METAL GLAZE	47	5%	1/10W	
R520	1-249-423-11	CARBON	3.3K	5%	1/4W	F
R521	1-216-065-00	METAL GLAZE	4.7K	5%	1/10W	
R522	1-260-111-11	CARBON	10K	5%	1/2W	
R523	1-215-892-11	METAL OXIDE	1K	5%	2W	F
R524	1-216-093-00	METAL GLAZE	68K	5%	1/10W	
R525	1-216-069-00	METAL GLAZE	6.8K	5%	1/10W	
R526	1-216-089-00	METAL GLAZE	47K	5%	1/10W	
R527	1-216-089-00	METAL GLAZE	47K	5%	1/10W	
R528	1-216-089-00	METAL GLAZE	47K	5%	1/10W	
R529	1-216-089-00	METAL GLAZE	47K	5%	1/10W	
R530	1-216-367-11	METAL OXIDE	0.68	5%	2W	F
R531	1-216-077-00	METAL GLAZE	15K	5%	1/10W	
R532	1-216-478-11	METAL OXIDE	390	5%	3W	F
R533	1-247-723-11	CARBON	6.8K	5%	1/4W	F
R534	1-216-085-00	METAL GLAZE	33K	5%	1/10W	
R535	1-249-448-11	CARBON	1.2	5%	1/4W	F
R536	1-216-101-00	METAL GLAZE	150K	5%	1/10W	
R537	1-216-089-00	METAL GLAZE	47K	5%	1/10W	
R539	1-216-065-00	METAL GLAZE	4.7K	5%	1/10W	

A

REF.NO.	PART NO.	DESCRIPTION				REMARK
R540	1-216-113-00	METAL GLAZE	470K	5%	1/10W	
R541	1-249-383-11	CARBON	1.5	5%	1/4W	F
R542	1-216-057-00	METAL GLAZE	2.2K	5%	1/10W	
R543	1-212-883-00	FUSIBLE	120	5%	1/4W	F
R544	1-216-095-00	METAL GLAZE	82K	5%	1/10W	
R545	1-216-073-00	METAL GLAZE	10K	5%	1/10W	
R546	1-249-425-11	CARBON	4.7K	5%	1/4W	F
R547	1-216-091-00	METAL GLAZE	56K	5%	1/10W	
R548	1-216-057-00	METAL GLAZE	2.2K	5%	1/10W	
R549	1-216-677-11	METAL CHIP	12K	0.50%	1/10W	
R550	1-216-053-00	METAL GLAZE	1.5K	5%	1/10W	
R551	1-216-077-00	METAL GLAZE	15K	5%	1/10W	
R552	1-216-033-00	METAL GLAZE	220	5%	1/10W	
R553	1-216-083-00	METAL GLAZE	27K	5%	1/10W	
R554	1-216-095-00	METAL GLAZE	82K	5%	1/10W	
R555	1-208-823-11	METAL CHIP	51K	0.50%	1/10W	
R556	1-215-899-11	METAL OXIDE	15K	5%	2W	F
R558	1-247-711-11	CARBON	680	5%	1/4W	F
R559	1-216-109-00	METAL GLAZE	330K	5%	1/10W	
R560	1-216-091-00	METAL GLAZE	56K	5%	1/10W	
R561	1-216-049-91	METAL GLAZE	1K	5%	1/10W	
R562	1-247-692-11	CARBON	22	5%	1/4W	F
R563	1-216-017-00	METAL GLAZE	47	5%	1/10W	
R564	1-216-107-00	METAL GLAZE	270K	5%	1/10W	
R565	1-216-033-00	METAL GLAZE	220	5%	1/10W	
R566	1-216-685-11	METAL CHIP	27K	0.50%	1/10W	
R567	1-216-081-00	METAL GLAZE	22K	5%	1/10W	
R568	1-216-073-00	METAL GLAZE	10K	5%	1/10W	
R569	1-260-119-11	CARBON	47K	5%	1/2W	
R571	1-216-065-00	METAL GLAZE	4.7K	5%	1/10W	
R572	1-216-059-00	METAL GLAZE	2.7K	5%	1/10W	
R573	1-216-071-00	METAL GLAZE	8.2K	5%	1/10W	
R574	1-216-689-11	METAL GLAZE	39K	5%	1/10W	
R575	1-249-383-11	CARBON	1.5	5%	1/4W	F
R576	1-216-101-00	METAL GLAZE	150K	5%	1/10W	
R578	1-208-824-11	METAL CHIP	56K	0.50%	1/10W	
R580	1-216-105-91	METAL GLAZE	220K	5%	1/10W	
R582	1-216-085-00	METAL GLAZE	33K	5%	1/10W	
R583	1-216-039-00	METAL GLAZE	390	5%	1/10W	
R584	1-216-073-00	METAL GLAZE	10K	5%	1/10W	
R585	1-216-033-00	METAL GLAZE	220	5%	1/10W	
R586	1-208-817-11	METAL CHIP	30K	0.50%	1/10W	
R587	1-208-806-11	METAL CHIP	10K	0.50%	1/10W	
R588	1-216-077-00	METAL GLAZE	15K	5%	1/10W	
R589	1-216-067-00	METAL GLAZE	5.6K	5%	1/10W	
R590	1-216-081-00	METAL GLAZE	22K	5%	1/10W	
R591	1-208-814-11	METAL CHIP	22K	0.50%	1/10W	
R592	1-247-688-11	CARBON	10	5%	1/4W	F
R593	1-216-295-91	CONDCTOR, CHIP				
R594	1-260-104-91	CARBON	2.7K	5%	1/2W	
R595	1-216-689-11	METAL GLAZE	39K	5%	1/10W	
R596	1-214-754-00	METAL	11K	1%	1/4W	
R597	1-249-417-11	CARBON	1K	5%	1/4W	F
R598	1-216-085-00	METAL GLAZE	33K	5%	1/10W	
R599	1-216-645-11	METAL CHIP	560	0.50%	1/10W	
R1103	1-216-077-00	METAL GLAZE	15K	5%	1/10W	
R1104	1-216-699-11	METAL CHIP	100K	0.50%	1/10W	
R1105	1-216-073-00	METAL GLAZE	10K	5%	1/10W	
R1106	1-216-097-00	METAL GLAZE	100K	5%	1/10W	
R1107	1-216-059-00	METAL GLAZE	2.7K	5%	1/10W	
R1108	1-208-812-11	METAL CHIP	18K	0.50%	1/10W	
R1111	1-216-065-00	METAL GLAZE	4.7K	5%	1/10W	
R1112	1-216-065-00	METAL GLAZE	4.7K	5%	1/10W	
R1113	1-216-081-00	METAL GLAZE	22K	5%	1/10W	

REF.NO.	PART NO.	DESCRIPTION				REMARK
R1114	1-216-049-91	METAL GLAZE	1K	5%	1/10W	
R1115	1-216-049-91	METAL GLAZE	1K	5%	1/10W	
R1116	1-216-677-11	METAL CHIP	12K	0.50%	1/10W	
R1117	1-216-069-00	METAL GLAZE	6.8K	5%	1/10W	
R1118	1-216-113-00	METAL GLAZE	470K	5%	1/10W	
R1119	1-216-694-11	METAL CHIP	62K	0.50%	1/10W	
R1120	1-216-089-00	METAL GLAZE	47K	5%	1/10W	
R1123	1-216-071-00	METAL GLAZE	8.2K	5%	1/10W	
R1124	1-216-113-00	METAL GLAZE	470K	5%	1/10W	
R1125	1-216-049-91	METAL GLAZE	1K	5%	1/10W	
R1126	1-216-041-00	METAL GLAZE	470	5%	1/10W	
R1128	1-216-065-00	METAL GLAZE	4.7K	5%	1/10W	
R1129	1-216-071-00	METAL GLAZE	8.2K	5%	1/10W	
R1130	1-216-049-91	METAL GLAZE	1K	5%	1/10W	
R1131	1-216-049-91	METAL GLAZE	1K	5%	1/10W	
R1132	1-216-071-00	METAL GLAZE	8.2K	5%	1/10W	
R1133	1-216-069-00	METAL GLAZE	6.8K	5%	1/10W	
R1134	1-216-073-00	METAL GLAZE	10K	5%	1/10W	
R1136	1-216-097-00	METAL GLAZE	100K	5%	1/10W	
R1137	1-216-073-00	METAL GLAZE	10K	5%	1/10W	
R1138	1-216-081-00	METAL GLAZE	22K	5%	1/10W	
R1139	1-216-055-00	METAL GLAZE	1.8K	5%	1/10W	
R1140	1-208-784-11	METAL CHIP	1.2K	0.50%	1/10W	
R1141	1-216-083-00	METAL GLAZE	27K	5%	1/10W	
R1142	1-208-784-11	METAL CHIP	1.2K	0.50%	1/10W	
R1143	1-208-784-11	METAL CHIP	1.2K	0.50%	1/10W	
R1144	1-216-073-00	METAL GLAZE	10K	5%	1/10W	
R1145	1-216-067-00	METAL GLAZE	5.6K	5%	1/10W	
R1146	1-216-057-00	METAL GLAZE	2.2K	5%	1/10W	
R1147	1-216-057-00	METAL GLAZE	2.2K	5%	1/10W	
R1148	1-216-065-00	METAL GLAZE	4.7K	5%	1/10W	
R1150	1-216-037-00	METAL GLAZE	330	5%	1/10W	
R1151	1-216-081-00	METAL GLAZE	22K	5%	1/10W	
R1155	1-216-133-00	METAL GLAZE	3.3M	5%	1/10W	
R1161	1-218-776-11	METAL CHIP	1M	0.50%	1/10W	
R1162	1-218-768-11	METAL CHIP	470K	0.50%	1/10W	
R1163	1-216-033-00	METAL GLAZE	220	5%	1/10W	
R1164	1-216-049-91	METAL GLAZE	1K	5%	1/10W	
R1165	1-216-049-91	METAL GLAZE	1K	5%	1/10W	
R1167	1-216-097-00	METAL GLAZE	100K	5%	1/10W	
R1168	1-216-097-00	METAL GLAZE	100K	5%	1/10W	
R1169	1-216-097-00	METAL GLAZE	100K	5%	1/10W	
R1170	1-216-089-00	METAL GLAZE	47K	5%	1/10W	
R1171	1-216-085-00	METAL GLAZE	33K	5%	1/10W	
R1172	1-216-085-00	METAL GLAZE	33K	5%	1/10W	
R1173	1-216-295-91	CONDCTOR, CHIP				
R1177	1-216-071-00	METAL GLAZE	8.2K	5%	1/10W	
R1179	1-216-041-00	METAL GLAZE	470	5%	1/10W	
R1180	1-216-089-00	METAL GLAZE	47K	5%	1/10W	
R1182	1-216-131-11	METAL GLAZE	2.7M	5%	1/10W	
R1183	1-216-071-00	METAL GLAZE	8.2K	5%	1/10W	
R1184	1-216-131-11	METAL GLAZE	2.7M	5%	1/10W	
R1185	1-216-071-00	METAL GLAZE	8.2K	5%	1/10W	
R1186	1-216-131-11	METAL GLAZE	2.7M	5%	1/10W	
R1187	1-216-071-00	METAL GLAZE	8.2K	5%	1/10W	
R1188	1-216-131-11	METAL GLAZE	2.7M	5%	1/10W	
R1189	1-216-071-00	METAL GLAZE	8.2K	5%	1/10W	
R1190	1-216-131-11	METAL GLAZE	2.7M	5%	1/10W	
R1191	1-216-071-00	METAL GLAZE	8.2K	5%	1/10W	
R1192	1-216-131-11	METAL GLAZE	2.7M	5%	1/10W	
R1193	1-216-025-91	METAL GLAZE	100	5%	1/10W	
R1194	1-216-085-00	METAL GLAZE	33K	5%	1/10W	
R1195	1-216-025-91	METAL GLAZE	100	5%	1/10W	

REF.NO.	PART NO.	DESCRIPTION				REMARK
R1196	1-216-085-00	METAL GLAZE	33K	5%	1/10W	
R1197	1-216-025-91	METAL GLAZE	100	5%	1/10W	
R1198	1-216-085-00	METAL GLAZE	33K	5%	1/10W	
R1304	1-216-689-11	METAL GLAZE	39K	5%	1/10W	
R1305	1-216-033-00	METAL GLAZE	220	5%	1/10W	
R1306	1-216-645-11	METAL CHIP	560	0.50%	1/10W	
R1307	1-216-091-00	METAL GLAZE	56K	5%	1/10W	
R1308	1-216-645-11	METAL CHIP	560	0.50%	1/10W	
R1309	1-216-025-91	METAL GLAZE	100	5%	1/10W	
R1311	1-216-089-00	METAL GLAZE	47K	5%	1/10W	
R1312	1-216-023-00	METAL GLAZE	82	5%	1/10W	
R1313	1-216-097-00	METAL GLAZE	100K	5%	1/10W	
R1314	1-216-081-00	METAL GLAZE	22K	5%	1/10W	
R1316	1-216-065-00	METAL GLAZE	4.7K	5%	1/10W	
R1317	1-216-033-00	METAL GLAZE	220	5%	1/10W	
R1319	1-216-085-00	METAL GLAZE	33K	5%	1/10W	
R1320	1-216-057-00	METAL GLAZE	2.2K	5%	1/10W	
R1321	1-216-649-11	METAL CHIP	820	0.50%	1/10W	
R1322	1-216-057-00	METAL GLAZE	2.2K	5%	1/10W	
R1324	1-216-061-00	METAL GLAZE	3.3K	5%	1/10W	
R1325	1-216-652-11	METAL CHIP	1.1K	0.50%	1/10W	
R1326	1-216-073-00	METAL GLAZE	10K	5%	1/10W	
R1327	1-216-073-00	METAL GLAZE	10K	5%	1/10W	
R1328	1-216-125-00	METAL GLAZE	1.5M	5%	1/10W	
R1329	1-216-103-91	METAL GLAZE	180K	5%	1/10W	
R1330	1-216-081-00	METAL GLAZE	22K	5%	1/10W	
R1331	1-208-810-11	METAL CHIP	15K	0.50%	1/10W	
R1332	1-216-671-11	METAL CHIP	6.8K	0.50%	1/10W	
R1333	1-216-049-91	METAL GLAZE	1K	5%	1/10W	
R1334	1-216-063-00	METAL GLAZE	3.9K	5%	1/10W	
R1335	1-249-401-11	CARBON	47	5%	1/4W	F
R1336	1-216-095-00	METAL GLAZE	82K	5%	1/10W	
R1337	1-216-061-00	METAL GLAZE	3.3K	5%	1/10W	
R1338	1-216-647-11	METAL CHIP	680	0.50%	1/10W	
R1339	1-216-033-00	METAL GLAZE	220	5%	1/10W	
R1340	1-216-033-00	METAL GLAZE	220	5%	1/10W	
R1341	1-216-033-00	METAL GLAZE	220	5%	1/10W	
R1342	1-216-083-00	METAL GLAZE	27K	5%	1/10W	
R1343	1-216-037-00	METAL GLAZE	330	5%	1/10W	
R1344	1-216-093-00	METAL GLAZE	68K	5%	1/10W	
R1345	1-216-109-00	METAL GLAZE	330K	5%	1/10W	
R1346	1-216-097-00	METAL GLAZE	100K	5%	1/10W	
R1347	1-216-073-00	METAL GLAZE	10K	5%	1/10W	
R1348	1-216-071-00	METAL GLAZE	8.2K	5%	1/10W	
R1349	1-216-035-00	METAL GLAZE	270	5%	1/10W	
R1350	1-216-073-00	METAL GLAZE	10K	5%	1/10W	
R1351	1-216-033-00	METAL GLAZE	220	5%	1/10W	
R1353	1-216-065-00	METAL GLAZE	4.7K	5%	1/10W	
R1354	1-216-089-00	METAL GLAZE	47K	5%	1/10W	
R1355	1-216-033-00	METAL GLAZE	220	5%	1/10W	
R1356	1-216-105-91	METAL GLAZE	220K	5%	1/10W	
R1357	1-216-101-00	METAL GLAZE	150K	5%	1/10W	
R1358	1-216-071-00	METAL GLAZE	8.2K	5%	1/10W	
R1359	1-216-099-00	METAL GLAZE	120K	5%	1/10W	
R1360	1-216-065-00	METAL GLAZE	4.7K	5%	1/10W	
R1361	1-216-113-00	METAL GLAZE	470K	5%	1/10W	
R1362	1-216-676-11	METAL CHIP	11K	0.50%	1/10W	
R1363	1-216-113-00	METAL GLAZE	470K	5%	1/10W	
R1364	1-216-073-00	METAL GLAZE	10K	5%	1/10W	
R1365	1-216-131-11	METAL GLAZE	2.7M	5%	1/10W	
R1366	1-216-081-00	METAL GLAZE	22K	5%	1/10W	
R1367	1-216-660-11	METAL CHIP	2.4K	0.50%	1/10W	
R1368	1-216-059-00	METAL GLAZE	2.7K	5%	1/10W	
R1369	1-216-051-00	METAL GLAZE	1.2K	5%	1/10W	

REF.NO.	PART NO.	DESCRIPTION				REMARK
R1370	1-216-105-91	METAL GLAZE	220K	5%	1/10W	
R1371	1-216-113-00	METAL GLAZE	470K	5%	1/10W	
R1372	1-216-089-00	METAL GLAZE	47K	5%	1/10W	
R1373	1-216-063-00	METAL GLAZE	3.9K	5%	1/10W	
R1374	1-216-101-00	METAL GLAZE	150K	5%	1/10W	
R1375	1-216-645-11	METAL CHIP	560	0.50%	1/10W	
R1376	1-216-647-11	METAL CHIP	680	0.50%	1/10W	
R1377	1-216-055-00	METAL GLAZE	1.8K	5%	1/10W	
R1378	1-216-065-00	METAL GLAZE	4.7K	5%	1/10W	
R1379	1-216-037-00	METAL GLAZE	330	5%	1/10W	
R1380	1-216-645-11	METAL CHIP	560	0.50%	1/10W	
R1381	1-216-647-11	METAL CHIP	680	0.50%	1/10W	
R1382	1-216-073-00	METAL GLAZE	10K	5%	1/10W	
R1383	1-208-812-11	METAL CHIP	18K	0.50%	1/10W	
R1384	1-216-091-00	METAL GLAZE	56K	5%	1/10W	
R1385	1-216-073-00	METAL GLAZE	10K	5%	1/10W	
R1386	1-216-077-00	METAL GLAZE	15K	5%	1/10W	
R1387	1-208-784-11	METAL CHIP	1.2K	0.50%	1/10W	
R1388	1-216-689-11	METAL CHIP	39K	0.50%	1/10W	
R1389	1-216-657-11	METAL CHIP	1.8K	0.50%	1/10W	
R1390	1-216-647-11	METAL CHIP	680	0.50%	1/10W	
R1391	1-216-025-91	METAL GLAZE	100	5%	1/10W	
R1392	1-216-041-00	METAL GLAZE	470	5%	1/10W	
R1393	1-216-063-00	METAL GLAZE	3.9K	5%	1/10W	
R1394	1-216-041-00	METAL GLAZE	470	5%	1/10W	
R1395	1-216-071-00	METAL GLAZE	8.2K	5%	1/10W	
R1396	1-216-071-00	METAL GLAZE	8.2K	5%	1/10W	
R1397	1-216-065-00	METAL GLAZE	4.7K	5%	1/10W	
R1399	1-216-073-00	METAL GLAZE	10K	5%	1/10W	
R1401	1-216-085-00	METAL GLAZE	33K	5%	1/10W	
R1402	1-216-295-91	CONDCTOR, CHIP				
R1403	1-216-651-11	METAL CHIP	1K	0.50%	1/10W	
R1404	1-208-812-11	METAL CHIP	18K	0.50%	1/10W	
R1405	1-216-071-00	METAL GLAZE	8.2K	5%	1/10W	
R1406	1-208-784-11	METAL CHIP	1.2K	0.50%	1/10W	
R1407	1-216-063-00	METAL GLAZE	3.9K	5%	1/10W	
R1408	1-216-113-00	METAL GLAZE	470K	5%	1/10W	
R1409	1-216-295-91	CONDCTOR, CHIP				
R1410	1-216-053-00	METAL GLAZE	1.5K	5%	1/10W	
R1411	1-216-073-00	METAL GLAZE	10K	5%	1/10W	
R1412	1-216-107-00	METAL GLAZE	270K	5%	1/10W	
R1413	1-216-081-00	METAL GLAZE	22K	5%	1/10W	
R1414	1-216-057-00	METAL GLAZE	2.2K	5%	1/10W	
R1415	1-216-093-00	METAL GLAZE	68K	5%	1/10W	
R1416	1-216-113-00	METAL GLAZE	470K	5%	1/10W	
R1417	1-216-033-00	METAL GLAZE	220	5%	1/10W	
R1418	1-216-033-00	METAL GLAZE	220	5%	1/10W	
R1419	1-216-025-91	METAL GLAZE	100	5%	1/10W	
R1420	1-216-089-00	METAL GLAZE	47K	5%	1/10W	
R1421	1-216-649-11	METAL CHIP	820	0.50%	1/10W	
R1422	1-216-085-00	METAL GLAZE	33K	5%	1/10W	
R1423	1-216-057-00	METAL GLAZE	2.2K	5%	1/10W	
R1424	1-216-081-00	METAL GLAZE	22K	5%	1/10W	
R1425	1-216-013-00	METAL GLAZE	33	5%	1/10W	
R1426	1-216-113-00	METAL GLAZE	470K	5%	1/10W	
R1427	1-208-812-11	METAL CHIP	18K	0.50%	1/10W	
R1428	1-216-061-00	METAL GLAZE	3.3K	5%	1/10W	
R1429	1-208-799-11	METAL CHIP	5.1K	0.50%	1/10W	
R1430	1-216-073-00	METAL GLAZE	10K	5%	1/10W	
R1431	1-216-129-00	METAL GLAZE	2.2M	5%	1/10W	
R1432	1-216-089-00	METAL GLAZE	47K	5%	1/10W	
R1433	1-216-085-00	METAL GLAZE	33K	5%	1/10W	
R1434	1-216-645-11	METAL CHIP	560	0.50%	1/10W	

A

• The components identified by ⊠ in this manual have been carefully factory-selected for each set in order to satisfy regulations regarding X-ray radiation. Should replacement be required, replace only with the value originally used.

The components identified by shading and mark ⚠ are critical for safety.
Replace only with part number specified.

Les composants identifies par une trame et une marque ⚠ sont critiques pour la securite.
Ne les remplacer que par une piece portant le numero specifie.

REF.NO.	PART NO.	DESCRIPTION				REMARK
R1435	1-216-055-00	METAL GLAZE	1.8K	5%	1/10W	
R1436	1-216-073-00	METAL GLAZE	10K	5%	1/10W	
R1437	1-216-069-00	METAL GLAZE	6.8K	5%	1/10W	
R1438	1-216-073-00	METAL GLAZE	10K	5%	1/10W	
R1439	1-216-059-00	METAL GLAZE	2.7K	5%	1/10W	
R1440	1-216-041-00	METAL GLAZE	470	5%	1/10W	
R1441	1-216-033-00	METAL GLAZE	220	5%	1/10W	
R1442	1-216-073-00	METAL GLAZE	10K	5%	1/10W	
R1443	1-216-013-00	METAL GLAZE	33	5%	1/10W	
R1444	1-216-057-00	METAL GLAZE	2.2K	5%	1/10W	
R1445	1-216-071-00	METAL GLAZE	8.2K	5%	1/10W	
R1446	1-216-071-00	METAL GLAZE	8.2K	5%	1/10W	
R1447	1-216-081-00	METAL GLAZE	22K	5%	1/10W	
R1448	1-216-085-00	METAL GLAZE	33K	5%	1/10W	
R1449	1-216-057-00	METAL GLAZE	2.2K	5%	1/10W	
R1450	1-216-129-00	METAL GLAZE	2.2M	5%	1/10W	
R1451	1-216-093-00	METAL GLAZE	68K	5%	1/10W	
R1452	1-216-085-00	METAL GLAZE	33K	5%	1/10W	
R1453	1-216-013-00	METAL GLAZE	33	5%	1/10W	
R1454	1-216-065-00	METAL GLAZE	4.7K	5%	1/10W	
R1455	1-216-113-00	METAL GLAZE	470K	5%	1/10W	
R1456	1-216-129-00	METAL GLAZE	2.2M	5%	1/10W	
R1457	1-216-089-00	METAL GLAZE	47K	5%	1/10W	
R1458	1-216-085-00	METAL GLAZE	33K	5%	1/10W	
R1459	1-216-133-00	METAL GLAZE	3.3M	5%	1/10W	
R1460	1-216-097-00	METAL GLAZE	100K	5%	1/10W	
R1461	1-216-645-11	METAL CHIP	560	0.50%	1/10W	
R1462	1-216-645-11	METAL CHIP	560	0.50%	1/10W	
R1463	1-216-645-11	METAL CHIP	560	0.50%	1/10W	
R1464	1-216-057-00	METAL GLAZE	2.2K	5%	1/10W	
R1465	1-216-097-00	METAL GLAZE	100K	5%	1/10W	
R1466	1-216-055-00	METAL GLAZE	1.8K	5%	1/10W	
R1467	1-216-073-00	METAL GLAZE	10K	5%	1/10W	
R1468	1-216-091-00	METAL GLAZE	56K	5%	1/10W	
R1469	1-216-057-00	METAL GLAZE	2.2K	5%	1/10W	
R1470	1-216-061-00	METAL GLAZE	3.3K	5%	1/10W	
R1471	1-216-049-91	METAL GLAZE	1K	5%	1/10W	
R1472	1-216-085-00	METAL GLAZE	33K	5%	1/10W	
R1473	1-216-081-00	METAL GLAZE	22K	5%	1/10W	
R1474	1-216-687-11	METAL CHIP	33K	0.50%	1/10W	
R1475	1-216-677-11	METAL CHIP	12K	0.50%	1/10W	
R1476	1-216-063-00	METAL GLAZE	3.9K	5%	1/10W	
R1477	1-216-057-00	METAL GLAZE	2.2K	5%	1/10W	
R1478	1-216-061-00	METAL GLAZE	3.3K	5%	1/10W	
R1480	1-216-089-00	METAL GLAZE	47K	5%	1/10W	
R1481	1-216-115-00	METAL GLAZE	560K	5%	1/10W	
R1482	1-216-089-00	METAL GLAZE	47K	5%	1/10W	
R1483	1-216-089-00	METAL GLAZE	47K	5%	1/10W	
R1484	1-216-081-00	METAL GLAZE	22K	5%	1/10W	
R1485	1-216-113-00	METAL GLAZE	470K	5%	1/10W	
R1486	1-216-121-00	METAL GLAZE	1M	5%	1/10W	
R1487	1-216-113-00	METAL GLAZE	470K	5%	1/10W	
R1488	1-216-083-00	METAL GLAZE	27K	5%	1/10W	
R1489	1-216-069-00	METAL GLAZE	6.8K	5%	1/10W	
R1490	1-216-035-00	METAL GLAZE	270	5%	1/10W	
R1491	1-216-035-00	METAL GLAZE	270	5%	1/10W	
R1492	1-216-035-00	METAL GLAZE	270	5%	1/10W	
R1493	1-216-083-00	METAL GLAZE	27K	5%	1/10W	
R1494	1-216-081-00	METAL GLAZE	22K	5%	1/10W	
R1495	1-216-089-00	METAL GLAZE	47K	5%	1/10W	
R1498	1-216-057-00	METAL GLAZE	2.2K	5%	1/10W	
R1499	1-216-057-00	METAL GLAZE	2.2K	5%	1/10W	
R1500	1-216-649-11	METAL CHIP	820	0.50%	1/10W	
R1501	1-216-071-00	METAL GLAZE	8.2K	5%	1/10W	
R1502	1-260-105-11	CARBON	3.3K	5%	1/2W	
R1503	1-216-063-00	METAL GLAZE	3.9K	5%	1/10W	
R1504	1-208-817-11	METAL CHIP	30K	0.50%	1/10W	
R1505	1-247-688-11	CARBON	10	5%	1/4W	F
R1506	1-216-041-00	METAL GLAZE	470	5%	1/10W	
R1507	1-216-065-00	METAL GLAZE	4.7K	5%	1/10W	
R1508	1-216-689-11	METAL GLAZE	39K	5%	1/10W	
R1509	1-216-093-00	METAL GLAZE	68K	5%	1/10W	
R1510	1-216-077-00	METAL GLAZE	15K	5%	1/10W	
R1511	1-216-360-11	METAL OXIDE	8.2	5%	1W	F
R1512	1-216-647-11	METAL CHIP	680	0.50%	1/10W	
R1513	1-247-752-11	CARBON	1K	5%	1/2W	F
R1514	1-247-711-11	CARBON	680	5%	1/4W	F
R1515	1-216-350-11	METAL OXIDE	1.2	5%	1W	F
R1516	1-216-101-00	METAL GLAZE	150K	5%	1/10W	
R1518	1-215-867-00	METAL OXIDE	470	5%	1W	F
R1519	1-216-355-11	METAL OXIDE	3.3	5%	1W	F
R1520	1-216-027-00	METAL GLAZE	120	5%	1/10W	
R1521	1-216-029-00	METAL GLAZE	150	5%	1/10W	
R1522	1-249-887-11	CARBON	33	5%	1/4W	F
R1523	1-216-350-11	METAL OXIDE	1.2	5%	1W	F
R1524	1-216-427-00	METAL OXIDE	120	5%	1W	F
R1525	1-216-083-00	METAL GLAZE	27K	5%	1/10W	
R1526	1-216-089-00	METAL GLAZE	47K	5%	1/10W	
R1527	1-249-413-11	CARBON	470	5%	1/4W	F
R1528	1-215-869-11	METAL OXIDE	1K	5%	1W	F
R1529	1-202-829-11	SOLID	8.2K	20%	1/2W	
R1530	1-216-115-00	METAL GLAZE	560K	5%	1/10W	
R1531	1-247-697-11	CARBON	56	5%	1/4W	F
R1532	1-216-059-00	METAL GLAZE	2.7K	5%	1/10W	
R1533	1-249-414-11	CARBON	560	5%	1/4W	F
R1534	1-216-659-11	METAL CHIP	2.2K	0.50%	1/10W	
⊠R1535⚠						
⊠R1536⚠						
R1537	1-249-389-11	CARBON	4.7	5%	1/4W	F
R1538	1-216-073-00	METAL GLAZE	10K	5%	1/10W	
R1539	1-216-689-11	METAL GLAZE	39K	5%	1/10W	
R1540	1-216-105-91	METAL GLAZE	220K	5%	1/10W	
R1541	1-216-081-00	METAL GLAZE	22K	5%	1/10W	
R1542	1-216-111-00	METAL GLAZE	390K	5%	1/10W	
R1543	1-216-027-00	METAL GLAZE	120	5%	1/10W	
R1544	1-216-117-00	METAL GLAZE	680K	5%	1/10W	
R1545	1-216-101-00	METAL GLAZE	150K	5%	1/10W	
R1547	1-216-393-00	METAL OXIDE	2.2	5%	3W	F
R1548	1-216-057-00	METAL GLAZE	2.2K	5%	1/10W	
R1549	1-260-094-11	CARBON	390	5%	1/2W	
R1550	1-216-105-91	METAL GLAZE	220K	5%	1/10W	
R1551	1-249-393-11	CARBON	10	5%	1/4W	F
R1552	1-216-091-00	METAL GLAZE	56K	5%	1/10W	
R1553	1-216-091-00	METAL GLAZE	56K	5%	1/10W	
R1554	1-216-059-00	METAL GLAZE	2.7K	5%	1/10W	
R1555	1-216-295-91	CONDCTOR, CHIP				
R1556	1-216-071-00	METAL GLAZE	8.2K	5%	1/10W	
R1557	1-218-760-11	METAL CHIP	220K	0.50%	1/10W	
R1558	1-249-393-11	CARBON	10	5%	1/4W	F
R1559	1-249-393-11	CARBON	10	5%	1/4W	F
R1560	1-216-049-91	METAL GLAZE	1K	5%	1/10W	
R1561	1-208-812-11	METAL CHIP	18K	0.50%	1/10W	
R1562	1-214-964-00	METAL	1M	1%	1/4W	
R1563	1-214-964-00	METAL	1M	1%	1/4W	
R1564	1-208-812-11	METAL CHIP	18K	0.50%	1/10W	
R1567	1-216-089-00	METAL GLAZE	47K	5%	1/10W	
R1568	1-216-081-00	METAL GLAZE	22K	5%	1/10W	

A

REF.NO.	PART NO.	DESCRIPTION				REMARK
R1569	1-216-073-00	METAL GLAZE	10K	5%	1/10W	
R1570	1-216-073-00	METAL GLAZE	10K	5%	1/10W	
R1571	1-216-103-91	METAL GLAZE	180K	5%	1/10W	
R1572	1-216-101-00	METAL GLAZE	150K	5%	1/10W	
R1573	1-216-073-00	METAL GLAZE	10K	5%	1/10W	
R1574	1-216-041-00	METAL GLAZE	470	5%	1/10W	
R1575	1-216-025-91	METAL GLAZE	100	5%	1/10W	
R1576	1-216-025-91	METAL GLAZE	100	5%	1/10W	
R1577	1-216-025-91	METAL GLAZE	100	5%	1/10W	
R1578	1-216-065-00	METAL GLAZE	4.7K	5%	1/10W	
R1579	1-216-687-11	METAL CHIP	33K	0.50%	1/10W	
R2300	1-216-065-00	METAL GLAZE	4.7K	5%	1/10W	
R2301	1-216-065-00	METAL GLAZE	4.7K	5%	1/10W	
R2302	1-216-671-11	METAL CHIP	6.8K	0.50%	1/10W	
R2303	1-216-093-00	METAL GLAZE	68K	5%	1/10W	
R2304	1-216-105-91	METAL GLAZE	220K	5%	1/10W	
R2305	1-216-085-00	METAL GLAZE	33K	5%	1/10W	
R2306	1-216-089-00	METAL GLAZE	47K	5%	1/10W	
R2307	1-216-033-00	METAL GLAZE	220	5%	1/10W	
R2308	1-216-103-91	METAL GLAZE	180K	5%	1/10W	
R2309	1-216-049-91	METAL GLAZE	1K	5%	1/10W	
R2310	1-216-095-00	METAL GLAZE	82K	5%	1/10W	
R2311	1-216-073-00	METAL GLAZE	10K	5%	1/10W	
R2312	1-216-053-00	METAL GLAZE	1.5K	5%	1/10W	
R2313	1-216-049-91	METAL GLAZE	1K	5%	1/10W	
R2314	1-216-645-11	METAL CHIP	560	0.50%	1/10W	
R2315	1-208-810-11	METAL CHIP	15K	0.50%	1/10W	
R2316	1-216-081-00	METAL GLAZE	22K	5%	1/10W	
R2317	1-216-049-91	METAL GLAZE	1K	5%	1/10W	
R2318	1-216-069-00	METAL GLAZE	6.8K	5%	1/10W	
R2319	1-216-093-00	METAL GLAZE	68K	5%	1/10W	
R2320	1-216-677-11	METAL CHIP	12K	0.50%	1/10W	
R2321	1-216-057-00	METAL GLAZE	2.2K	5%	1/10W	
R2322	1-216-065-00	METAL GLAZE	4.7K	5%	1/10W	
R2323	1-208-814-11	METAL CHIP	22K	0.50%	1/10W	
R2324	1-216-073-00	METAL GLAZE	10K	5%	1/10W	
R2325	1-216-063-00	METAL GLAZE	3.9K	5%	1/10W	
R2326	1-216-041-00	METAL GLAZE	470	5%	1/10W	
R2327	1-216-059-00	METAL GLAZE	2.7K	5%	1/10W	
R2328	1-216-049-91	METAL GLAZE	1K	5%	1/10W	
R2329	1-216-059-00	METAL GLAZE	2.7K	5%	1/10W	
R2330	1-216-049-91	METAL GLAZE	1K	5%	1/10W	
R2331	1-216-059-00	METAL GLAZE	2.7K	5%	1/10W	
R2332	1-216-049-91	METAL GLAZE	1K	5%	1/10W	
R2333	1-216-089-00	METAL GLAZE	47K	5%	1/10W	
R2334	1-216-041-00	METAL GLAZE	470	5%	1/10W	
R2335	1-216-061-00	METAL GLAZE	3.3K	5%	1/10W	
R2336	1-216-065-00	METAL GLAZE	4.7K	5%	1/10W	
R2337	1-216-037-00	METAL GLAZE	330	5%	1/10W	
R2338	1-216-073-00	METAL GLAZE	10K	5%	1/10W	
R2339	1-216-037-00	METAL GLAZE	330	5%	1/10W	
R2341	1-216-037-00	METAL GLAZE	330	5%	1/10W	
R2342	1-216-071-00	METAL GLAZE	8.2K	5%	1/10W	
R2343	1-216-081-00	METAL GLAZE	22K	5%	1/10W	
R2344	1-216-121-00	METAL GLAZE	1M	5%	1/10W	
R2345	1-208-812-11	METAL CHIP	18K	0.50%	1/10W	
R2346	1-216-061-00	METAL GLAZE	3.3K	5%	1/10W	
R2347	1-216-061-00	METAL GLAZE	3.3K	5%	1/10W	
R2348	1-216-061-00	METAL GLAZE	3.3K	5%	1/10W	
R2349	1-208-810-11	METAL CHIP	15K	0.50%	1/10W	
R2350	1-216-061-00	METAL GLAZE	3.3K	5%	1/10W	
R2351	1-216-061-00	METAL GLAZE	3.3K	5%	1/10W	
R2352	1-216-061-00	METAL GLAZE	3.3K	5%	1/10W	
R2353	1-216-041-00	METAL GLAZE	470	5%	1/10W	
R2354	1-216-025-91	METAL GLAZE	100	5%	1/10W	
R2355	1-216-089-00	METAL GLAZE	47K	5%	1/10W	
R2356	1-216-089-00	METAL GLAZE	47K	5%	1/10W	
R2358	1-216-025-91	METAL GLAZE	100	5%	1/10W	
R2361	1-216-099-00	METAL GLAZE	120K	5%	1/10W	
R2362	1-216-081-00	METAL GLAZE	22K	5%	1/10W	
R2363	1-216-065-00	METAL GLAZE	4.7K	5%	1/10W	
R2364	1-216-025-91	METAL GLAZE	100	5%	1/10W	
R2365	1-216-687-11	METAL CHIP	33K	0.50%	1/10W	
R2366	1-216-067-00	METAL GLAZE	5.6K	5%	1/10W	
R2367	1-216-097-00	METAL GLAZE	100K	5%	1/10W	
R2368	1-216-065-00	METAL GLAZE	4.7K	5%	1/10W	
R2369	1-216-690-11	METAL CHIP	43K	0.50%	1/10W	
R2370	1-216-689-11	METAL GLAZE	39K	5%	1/10W	
R2371	1-216-049-91	METAL GLAZE	1K	5%	1/10W	
R2372	1-216-113-00	METAL GLAZE	470K	5%	1/10W	
R2374	1-216-097-00	METAL GLAZE	100K	5%	1/10W	
R2375	1-216-089-00	METAL GLAZE	47K	5%	1/10W	
R2376	1-216-089-00	METAL GLAZE	47K	5%	1/10W	
R2377	1-216-033-00	METAL GLAZE	220	5%	1/10W	
R2378	1-216-089-00	METAL GLAZE	47K	5%	1/10W	
R2379	1-216-033-00	METAL GLAZE	220	5%	1/10W	
R2380	1-216-089-00	METAL GLAZE	47K	5%	1/10W	
R2381	1-216-089-00	METAL GLAZE	47K	5%	1/10W	
R2382	1-216-089-00	METAL GLAZE	47K	5%	1/10W	
R2383	1-216-033-00	METAL GLAZE	220	5%	1/10W	
R2384	1-216-689-11	METAL GLAZE	39K	5%	1/10W	
R2385	1-216-073-00	METAL GLAZE	10K	5%	1/10W	
R2386	1-216-073-00	METAL GLAZE	10K	5%	1/10W	
R2387	1-216-073-00	METAL GLAZE	10K	5%	1/10W	
R2389	1-216-033-00	METAL GLAZE	220	5%	1/10W	
R2390	1-216-647-11	METAL CHIP	680	0.50%	1/10W	
R2391	1-216-647-11	METAL CHIP	680	0.50%	1/10W	
R2392	1-216-073-00	METAL GLAZE	10K	5%	1/10W	
R2393	1-216-073-00	METAL GLAZE	10K	5%	1/10W	
R2394	1-216-081-00	METAL GLAZE	22K	5%	1/10W	
R2396	1-216-041-00	METAL GLAZE	470	5%	1/10W	
R2397	1-216-113-00	METAL GLAZE	470K	5%	1/10W	
R2398	1-216-109-00	METAL GLAZE	330K	5%	1/10W	
R2399	1-216-073-00	METAL GLAZE	10K	5%	1/10W	
R2501	1-216-083-00	METAL GLAZE	27K	5%	1/10W	
R2502	1-216-085-00	METAL GLAZE	33K	5%	1/10W	
R2551	1-216-091-00	METAL GLAZE	56K	5%	1/10W	
R2552	1-216-085-00	METAL GLAZE	33K	5%	1/10W	
R2553	1-216-083-00	METAL GLAZE	27K	5%	1/10W	
R2555	1-216-055-00	METAL GLAZE	1.8K	5%	1/10W	
R2556	1-216-051-00	METAL GLAZE	1.2K	5%	1/10W	
R2557	1-216-067-00	METAL GLAZE	5.6K	5%	1/10W	
R2558	1-216-057-00	METAL GLAZE	2.2K	5%	1/10W	
R2559	1-216-039-00	METAL GLAZE	390	5%	1/10W	
R2560	1-216-069-00	METAL GLAZE	6.8K	5%	1/10W	
R2561	1-216-001-00	METAL GLAZE	10	5%	1/10W	
R2562	1-216-001-00	METAL GLAZE	10	5%	1/10W	
R2563	1-216-057-00	METAL GLAZE	2.2K	5%	1/10W	
R3001	1-249-393-11	CARBON	10	5%	1/4W	F
R3301	1-216-073-00	METAL GLAZE	10K	5%	1/10W	
R3302	1-216-065-00	METAL GLAZE	4.7K	5%	1/10W	
R3303	1-216-065-00	METAL GLAZE	4.7K	5%	1/10W	
R3304	1-216-065-00	METAL GLAZE	4.7K	5%	1/10W	
R3305	1-216-061-00	METAL GLAZE	3.3K	5%	1/10W	
R3306	1-216-063-00	METAL GLAZE	3.9K	5%	1/10W	
R3307	1-216-083-00	METAL GLAZE	27K	5%	1/10W	
R3308	1-216-097-00	METAL GLAZE	100K	5%	1/10W	

A M

The components identified by shading and mark ⚠ are critical for safety.
Replace only with part number specified.

Les composants identifies par une trame et une marque ⚠ sont critiques pour la securite.
Ne les remplacer que par une piece portant le numero specifie.

REF.NO.	PART NO.	DESCRIPTION				REMARK
R3309	1-216-073-00	METAL GLAZE	10K	5%	1/10W	
R3310	1-216-049-91	METAL GLAZE	1K	5%	1/10W	
R3311	1-216-091-00	METAL GLAZE	56K	5%	1/10W	
R3312	1-216-105-91	METAL GLAZE	220K	5%	1/10W	
R3317	1-216-097-00	METAL GLAZE	100K	5%	1/10W	
R3320	1-216-085-00	METAL GLAZE	33K	5%	1/10W	
R3333	1-216-113-00	METAL GLAZE	470K	5%	1/10W	
R3334	1-216-073-00	METAL GLAZE	10K	5%	1/10W	
R3335	1-216-113-00	METAL GLAZE	470K	5%	1/10W	
R3337	1-216-099-00	METAL GLAZE	120K	5%	1/10W	
R3338	1-216-103-91	METAL GLAZE	180K	5%	1/10W	
R3341	1-216-690-11	METAL CHIP	43K	0.50%	1/10W	
R3342	1-216-095-00	METAL GLAZE	82K	5%	1/10W	
R3343	1-216-089-00	METAL GLAZE	47K	5%	1/10W	
R3346	1-216-025-91	METAL GLAZE	100	5%	1/10W	
R3347	1-216-025-91	METAL GLAZE	100	5%	1/10W	
R3348	1-216-025-91	METAL GLAZE	100	5%	1/10W	
R3349	1-216-025-91	METAL GLAZE	100	5%	1/10W	
R3350	1-216-117-00	METAL GLAZE	680K	5%	1/10W	
R3356	1-216-051-00	METAL GLAZE	1.2K	5%	1/10W	
R3357	1-216-051-00	METAL GLAZE	1.2K	5%	1/10W	
R3358	1-216-051-00	METAL GLAZE	1.2K	5%	1/10W	
R3359	1-216-081-00	METAL GLAZE	22K	5%	1/10W	
R3360	1-216-073-00	METAL GLAZE	10K	5%	1/10W	
R3361	1-216-089-00	METAL GLAZE	47K	5%	1/10W	
R3362	1-216-049-91	METAL GLAZE	1K	5%	1/10W	
R3363	1-216-049-91	METAL GLAZE	1K	5%	1/10W	
R3364	1-216-073-00	METAL GLAZE	10K	5%	1/10W	
R3366	1-216-085-00	METAL GLAZE	33K	5%	1/10W	
R3367	1-216-121-00	METAL GLAZE	1M	5%	1/10W	
R3368	1-216-041-00	METAL GLAZE	470	5%	1/10W	
R3369	1-216-085-00	METAL GLAZE	33K	5%	1/10W	
R3370	1-216-055-00	METAL GLAZE	1.8K	5%	1/10W	
R3371	1-216-121-00	METAL GLAZE	1M	5%	1/10W	
R3372	1-216-649-11	METAL CHIP	820	0.50%	1/10W	
R3373	1-216-647-11	METAL CHIP	680	0.50%	1/10W	
R3374	1-216-121-00	METAL GLAZE	1M	5%	1/10W	
R3375	1-208-812-11	METAL CHIP	18K	0.50%	1/10W	
R3376	1-216-081-00	METAL GLAZE	22K	5%	1/10W	
R3378	1-216-121-00	METAL GLAZE	1M	5%	1/10W	
R3381	1-216-041-00	METAL GLAZE	470	5%	1/10W	
R3382	1-216-645-11	METAL CHIP	560	0.50%	1/10W	
R3383	1-216-069-00	METAL GLAZE	6.8K	5%	1/10W	
R3384	1-216-063-00	METAL GLAZE	3.9K	5%	1/10W	
R3385	1-216-057-00	METAL GLAZE	2.2K	5%	1/10W	
R3386	1-216-057-00	METAL GLAZE	2.2K	5%	1/10W	
R3390	1-216-057-00	METAL GLAZE	2.2K	5%	1/10W	
R3394	1-216-089-00	METAL GLAZE	47K	5%	1/10W	
R3395	1-216-049-91	METAL GLAZE	1K	5%	1/10W	
R3396	1-216-041-00	METAL GLAZE	470	5%	1/10W	
R3397	1-216-041-00	METAL GLAZE	470	5%	1/10W	
R3398	1-216-690-11	METAL CHIP	43K	0.50%	1/10W	
R3399	1-216-025-91	METAL GLAZE	100	5%	1/10W	
R3400	1-216-091-00	METAL GLAZE	56K	5%	1/10W	
R3401	1-216-061-00	METAL GLAZE	3.3K	5%	1/10W	
R3402	1-216-092-00	METAL GLAZE	62K	5%	1/10W	
R3403	1-216-025-91	METAL GLAZE	100	5%	1/10W	
R3404	1-216-073-00	METAL GLAZE	10K	5%	1/10W	
R3405	1-216-067-00	METAL GLAZE	5.6K	5%	1/10W	
R3406	1-216-073-00	METAL GLAZE	10K	5%	1/10W	
R3407	1-216-057-00	METAL GLAZE	2.2K	5%	1/10W	
R3408	1-216-073-00	METAL GLAZE	10K	5%	1/10W	
R3409	1-216-025-91	METAL GLAZE	100	5%	1/10W	
R3410	1-216-073-00	METAL GLAZE	10K	5%	1/10W	

REF.NO.	PART NO.	DESCRIPTION				REMARK
R4401	1-216-085-00	METAL GLAZE	33K	5%	1/10W	
R4402	1-216-113-00	METAL GLAZE	470K	5%	1/10W	
R4404	1-216-073-00	METAL GLAZE	10K	5%	1/10W	
R4405	1-216-069-00	METAL GLAZE	6.8K	5%	1/10W	
R4407	1-216-061-00	METAL GLAZE	3.3K	5%	1/10W	
R4408	1-216-059-00	METAL GLAZE	2.7K	5%	1/10W	
R4409	1-216-059-00	METAL GLAZE	2.7K	5%	1/10W	
R4410	1-216-059-00	METAL GLAZE	2.7K	5%	1/10W	
R4411	1-216-113-00	METAL GLAZE	470K	5%	1/10W	
R4412	1-216-113-00	METAL GLAZE	470K	5%	1/10W	
R4413	1-216-295-91	CONDCTOR, CHIP				
R4414	1-216-295-91	CONDCTOR, CHIP				
R4415	1-216-295-91	CONDCTOR, CHIP				
R4416	1-216-295-91	CONDCTOR, CHIP				
		<VARIABLE RESISTOR>				
RV501	1-223-102-00	RES, ADJ, WIREWOUND 120				
		<TRANSFORMER>				
T500	1-426-668-11	TRANSFORMER, FERRITE (HDT)				
T501 ⚠	1-453-164-11	TRANSFORMER ASSY, FLYBACK				
T502	1-413-059-00	TRANSFORMER, FERRITE (DFT)				
T503 ⚠	1-460-017-11	TRANSFORMER				
		<THERMISTOR>				
TH500	1-807-970-11	THERMISTOR				
		<CRYSTAL>				
X101	1-579-175-11	VIBRATOR, CERAMIC				
X300	1-577-259-11	VIBRATOR, CRYSTAL				
X301	1-527-722-00	OSCILLATOR, CRYSTAL				
		**********				
	*A-1304-032-A	M BOARD, COMPLETE				
		**********				
	1-540-044-11	SOCKET, IC				
		<CAPACITOR>				
C1200	1-124-472-11	ELECT	470MF	20%	10V	
C1201	1-164-161-11	CERAMIC CHIP	0.0022MF	10%	50V	
C1202	1-164-161-11	CERAMIC CHIP	0.0022MF	10%	50V	
C1203	1-163-103-00	CERAMIC CHIP	27PF	5%	50V	
C1204	1-163-103-00	CERAMIC CHIP	27PF	5%	50V	
C1205	1-164-346-11	CERAMIC CHIP	1MF		16V	
C1208	1-164-346-11	CERAMIC CHIP	1MF		16V	
C1210	1-126-101-11	ELECT	100MF	20%	16V	
C1211	1-164-346-11	CERAMIC CHIP	1MF		16V	
C1212	1-163-109-00	CERAMIC CHIP	47PF	5%	50V	
C1213	1-126-301-11	ELECT	1MF	20%	50V	
C1214	1-126-301-11	ELECT	1MF	20%	50V	
C1215	1-126-301-11	ELECT	1MF	20%	50V	
C1216	1-126-301-11	ELECT	1MF	20%	50V	
		<CONNECTOR>				
CN1201*	1-565-488-11	CONNECTOR, BOARD TO BOARD 12P				
CN1202*	1-564-518-11	PLUG, CONNECTOR 3P				

The components identified by shading and mark ⚠ are critical for safety.
Replace only with part number specified.

Les composants identifies par une trame et une marque ⚠ sont critiques pour la securite.
Ne les remplacer que par une piece portant le numero specifie.

M G

REF.NO.	PART NO.	DESCRIPTION			REMARK
		<DIODE>			
D1200	8-719-801-78	DIODE 1SS184			
		<IC>			
IC1200	8-759-708-05	IC NJM78L05A			
IC1201	8-759-284-18	IC UPD78P014YCW			
IC1202	8-759-280-74	IC ST24C02CB1			
IC1203	8-759-149-05	IC UPD71051GB-10-3B4			
IC1204	8-759-335-70	IC ADM232LAR-REEL			
IC1205	8-759-042-02	IC S-80743AL-A7-S			
		<TRANSISTOR>			
Q1200	8-729-120-28	TRANSISTOR 2SC1623-L5L6			
		<RESISTOR>			
R1200	1-260-313-51	CARBON	56	5%	1/2W
R1201	1-216-073-00	METAL GLAZE	10K	5%	1/10W
R1202	1-216-295-91	CONDCTOR, CHIP			
R1203	1-216-065-00	METAL GLAZE	4.7K	5%	1/10W
R1204	1-216-065-00	METAL GLAZE	4.7K	5%	1/10W
R1205	1-216-065-00	METAL GLAZE	4.7K	5%	1/10W
R1206	1-216-295-91	CONDCTOR, CHIP			
R1207	1-216-295-91	CONDCTOR, CHIP			
R1210	1-216-025-91	METAL GLAZE	100	5%	1/10W
R1211	1-216-025-91	METAL GLAZE	100	5%	1/10W
R1213	1-216-025-91	METAL GLAZE	100	5%	1/10W
R1214	1-216-025-91	METAL GLAZE	100	5%	1/10W
R1215	1-216-025-91	METAL GLAZE	100	5%	1/10W
R1216	1-216-089-00	METAL GLAZE	47K	5%	1/10W
R1217	1-216-089-00	METAL GLAZE	47K	5%	1/10W
R1218	1-216-089-00	METAL GLAZE	47K	5%	1/10W
R1220	1-216-025-91	METAL GLAZE	100	5%	1/10W
		<SWITCH>			
S1200	1-570-623-11	SWITCH, DIP			
		<CRYSTAL>			
X1201	1-577-619-11	VIBRATOR, CRYSTAL			

****

*A-1316-215-A G BOARD, COMPLETE (PVM-2053MD)
****

*A-1316-216-A G BOARD, COMPLETE (PVM-1953MD)
****

REF.NO.	PART NO.	DESCRIPTION			REMARK
		<CAPACITOR>			
C602	⚠ 1-136-360-51	FILM	0.22MF	20%	250V
C603	⚠ 1-136-360-51	FILM	0.22MF	20%	250V
C604	⚠ 1-161-741-21	CERAMIC	0.001MF	10%	400V
C605	⚠ 1-161-741-21	CERAMIC	0.001MF	10%	400V
C606	⚠ 1-161-741-21	CERAMIC	0.001MF	10%	400V
C607	⚠ 1-161-741-21	CERAMIC	0.001MF	10%	400V
C608	⚠ 1-161-953-71	CERAMIC	0.0047MF	20%	400V
C609	⚠ 1-161-953-71	CERAMIC	0.0047MF	20%	400V
C610	⚠ 1-161-953-71	CERAMIC	0.0047MF	20%	400V
C611	⚠ 1-161-953-71	CERAMIC	0.0047MF	20%	400V
C612	⚠ 1-137-484-61	FILM	0.47MF	10%	630V
C613	1-137-484-11	FILM	0.47MF	10%	630V
C614	1-129-720-00	FILM	0.033MF	10%	630V
C615	1-136-619-11	FILM	0.0016MF	3%	2KV
C616	1-124-910-11	ELECT	47MF	20%	35V
C617	1-136-557-11	FILM	0.0033MF	10%	630V
C618	1-126-096-11	ELECT	10MF	20%	25V
C619	1-124-911-11	ELECT	220MF	20%	50V
C620	1-161-754-00	CERAMIC	0.001MF	10%	2KV
C621	1-125-494-11	ELECT(BLOCK)	560MF	20%	160V
C622	1-102-038-00	CERAMIC	0.001MF		500V
C623	1-126-944-11	ELECT	3300MF	20%	25V
C624	1-102-038-00	CERAMIC	0.001MF		500V
C625	1-124-557-11	ELECT	1000MF	20%	25V
C626	1-102-038-00	CERAMIC	0.001MF		500V
C627	1-124-922-11	ELECT	1000MF	20%	50V
C628	1-102-038-00	CERAMIC	0.001MF		500V
C629	1-124-922-11	ELECT	1000MF	20%	50V
C630	1-124-907-11	ELECT	10MF	20%	50V
C631	1-136-853-11	FILM	0.56MF	5%	200V
C632	1-124-562-11	ELECT	47MF	20%	160V
C633	1-124-122-11	ELECT	100MF	20%	50V
C634	1-124-911-11	ELECT	220MF	20%	50V
C636	1-124-910-11	ELECT	47MF	20%	50V
C1602	1-137-484-11	FILM	0.47MF	10%	630V
		<CONNECTOR>			
CN601	1-691-960-11	PIN, CONNECTOR (PC BOARD) 3P			
CN602	*1-695-561-11	PIN, CONNECTOR (PC BOARD) 7P			
CN603	*1-508-765-00	PIN, CONNECTOR (5MM PITCH) 3P			
CN604	*1-564-506-11	PLUG, CONNECTOR 3P			
CN605	*1-573-964-11	PIN, CONNECTOR (PC BOARD) 6P			
CN606	*1-564-508-11	PLUG, CONNECTOR 5P			
		<DIODE>			
D601	⚠ 8-719-032-39	DIODE DSA3A4-F3			
D602	⚠ 8-719-032-39	DIODE DSA3A4-F3			
D603	⚠ 8-719-032-39	DIODE DSA3A4-F3			
D604	⚠ 8-719-032-39	DIODE DSA3A4-F3			
D605	8-719-971-65	DIODE RGP15J-6040			
D606	8-719-300-33	DIODE RU-3AM			
D607	8-719-300-33	DIODE RU-3AM			
D608	8-719-911-19	DIODE 1SS119-25			
D609	8-719-300-33	DIODE RU-3AM			
D610	8-719-300-33	DIODE RU-3AM			
D612	8-719-045-48	DIODE FML-G12S			
D613	8-719-971-65	DIODE RGP15J-6040			
D614	8-719-045-48	DIODE FML-G12S			
D615	8-719-971-65	DIODE RGP15J-6040			
D616	8-719-300-33	DIODE RU-3AM			
D617	8-719-110-46	DIODE RD16ESB3			
		<FUSE>			
F603	⚠ 1-532-742-11	FUSE, GLASS TUBE 1.6A/125V			
	1-533-189-11	HOLDER, FUSE			
F604	⚠ 1-532-742-11	FUSE, GLASS TUBE 1.6A/125V			
	1-533-189-11	HOLDER, FUSE			
		<FERRITE BEAD>			

G C

The components identified by shading and mark ⚠ are critical for safety.
Replace only with part number specified.

Les composants identifies par une trame et une marque ⚠ sont critiques pour la securite.
Ne les remplacer que par une piece portant le numero specifie.

REF.NO.	PART NO.	DESCRIPTION				REMARK
FB601	1-410-396-41	FERRITE BEAD INDUCTOR 0.45UH				
FB602	1-410-396-41	FERRITE BEAD INDUCTOR 0.45UH				
FB603	1-410-396-41	FERRITE BEAD INDUCTOR 0.45UH				
FB604	1-410-396-41	FERRITE BEAD INDUCTOR 0.45UH				
FB605	1-410-396-41	FERRITE BEAD INDUCTOR 0.45UH				
		<IC>				
IC601	8-749-924-69	IC STR-M6523				
	4-382-854-11	SCREW (M3X10), P, SW (+); IC601				
IC602	8-749-010-47	IC STR-S3115				
	4-382-854-11	SCREW (M3X10), P, SW (+); IC602				
IC603	8-759-701-56	IC NJM78M05FA				
	4-382-854-11	SCREW (M3X10), P, SW (+); IC603				
IC604	8-759-231-53	IC TA7805S				
	4-382-854-11	SCREW (M3X10), P, SW (+); IC604				
		<JUMPER>				
JW609	1-410-679-31	INDUCTOR	270UH	(PVM-1953MD)		
		<COIL>				
L601	1-411-215-11	COIL, CHOKE 200UH				
L1601	1-410-679-31	INDUCTOR	270UH	(PVM-2053MD)		
L1602	1-421-421-00	COIL, CHOKE				
		<PHOTO COUPLER>				
PH601	8-749-923-50	PHOTO COUPLER PC111YS				
		<TRANSISTOR>				
Q601	8-729-140-96	TRANSISTOR 2SD774-34				
Q603	8-729-303-61	TRANSISTOR 2SC3851-G				
	4-382-854-11	SCREW (M3X10), P, SW (+); Q603				
		<RESISTOR>				
R601 ⚠	1-202-885-91	SOLID	1M	20%	1/2W	
R602	1-216-489-11	METAL OXIDE	27K	5%	3W	F
R603	1-216-491-11	METAL OXIDE	56K	5%	3W	F
R604	1-249-418-11	CARBON	1.2K	5%	1/4W	
R605	1-249-415-11	CARBON	680	5%	1/4W	
R606	1-207-642-00	WIREWOUND	0.15	10%	3W	F
R607	1-249-423-11	CARBON	3.3K	5%	1/4W	
R608	1-249-426-11	CARBON	5.6K	5%	1/4W	
R609	1-249-426-11	CARBON	5.6K	5%	1/4W	
R610	1-249-421-11	CARBON	2.2K	5%	1/4W	
R611	1-249-417-11	CARBON	1K	5%	1/4W	
R612	1-249-404-00	CARBON	82	5%	1/4W	
R613	1-249-419-11	CARBON	1.5K	5%	1/4W	
R614	1-249-385-11	CARBON	2.2	5%	1/4W	F
R615	1-218-265-11	METAL	8.2M	5%	1W	
R616	1-216-341-11	METAL OXIDE	0.22	5%	1W	F
R617	1-216-341-11	METAL OXIDE	0.22	5%	1W	F
R618	1-249-443-11	CARBON	0.47	5%	1/4W	F
R619	1-216-341-11	METAL OXIDE	0.22	5%	1W	F
R620	1-249-443-11	CARBON	0.47	5%	1/4W	F
R621	1-215-877-11	METAL OXIDE	22K	5%	1W	F
R622	1-247-700-11	CARBON	100	5%	1/4W	
R623	1-249-417-11	CARBON	1K	5%	1/4W	
R624	1-216-341-11	METAL OXIDE	0.22	5%	1W	F
R625	1-216-341-11	METAL OXIDE	0.22	5%	1W	F
R626	1-247-895-00	CARBON	470K	5%	1/4W	
R631	1-247-807-31	CARBON	100	5%	1/4W	
R1602	1-215-869-11	METAL OXIDE	1K	5%	1W	F
R1603	1-202-846-00	SOLID	470K	20%	1/2W	
		<RELAY>				
RY601⚠	1-515-738-11	RELAY				
		<TRANSFORMER>				
T601 ⚠	1-426-716-11	TRANSFORMER, LINE FILTER (LFT)				
T602 ⚠	1-426-716-11	TRANSFORMER, LINE FILTER (LFT)				
T603	1-427-885-11	TRANSFORMER, CONVERTER (SRT)				
		<THERMISTOR>				
THP601⚠	1-808-059-32	THERMISTOR, POSITIVE				
		<VARISTOR>				
VDR601⚠	1-809-942-71	VARISTOR				
		**********				
	*A-1331-300-A	C BOARD, COMPLETE				
		**********				
	*4-379-160-01	COVER (REAR LID), CV				
	*4-379-167-01	COVER (MAIN), CV				
		<CAPACITOR>				
C701	1-102-116-00	CERAMIC	680PF	10%	50V	
C702	1-102-116-00	CERAMIC	680PF	10%	50V	
C703	1-102-116-00	CERAMIC	680PF	10%	50V	
C704	1-102-121-00	CERAMIC	0.0022MF	10%	50V	
C705	1-126-101-11	ELECT	100MF	20%	16V	
C706	1-102-074-00	CERAMIC	0.001MF	10%	50V	
C707	1-162-116-00	CERAMIC	680PF	10%	2KV	
C708	1-136-601-11	FILM	0.01MF	10%	630V	
C710	1-101-880-00	CERAMIC	47PF	5%	50V	
C711	1-101-880-00	CERAMIC	47PF	5%	50V	
C712	1-101-880-00	CERAMIC	47PF	5%	50V	
C714	1-102-976-00	CERAMIC	180PF	5%	50V	
C715	1-102-976-00	CERAMIC	180PF	5%	50V	
C716	1-102-976-00	CERAMIC	180PF	5%	50V	
C722	1-162-622-11	CERAMIC	330PF	10%	6.3KV	
C724	1-124-667-11	ELECT	10MF	20%	100V	
C726	1-123-948-00	ELECT	22MF	20%	250V	
C733	1-123-947-00	ELECT	10MF	20%	250V	
C734	1-101-888-00	CERAMIC	68PF	5%	50V	
C737	1-102-934-00	CERAMIC	1PF	0.25PF	50V	
		<CONNECTOR>				
CN701	*1-564-511-11	PLUG, CONNECTOR 8P				
CN702	*1-573-964-11	PIN, CONNECTOR (PC BOARD) 6P				
CN703	*1-691-134-11	PIN, CONNECTOR (PC BOARD) 2P				
		<DIODE>				
D701	8-719-911-19	DIODE 1SS119-25				
D702	8-719-911-19	DIODE 1SS119-25				
D703	8-719-911-19	DIODE 1SS119-25				

The components identified by shading and mark ⚠ are critical for safety.
Replace only with part number specified.

Les composants identifies par une trame et une marque ⚠ sont critiques pour la securite.
Ne les remplacer que par une piece portant le numero specifie.

C H

REF.NO.	PART NO.	DESCRIPTION				REMARK
D704	8-719-911-19	DIODE 1SS119-25				
D705	8-719-911-19	DIODE 1SS119-25				
D706	8-719-911-19	DIODE 1SS119-25				
D707	8-719-901-83	DIODE 1SS83				
D708	8-719-901-83	DIODE 1SS83				
D709	8-719-901-83	DIODE 1SS83				
D713	8-719-901-83	DIODE 1SS83				
D715	8-719-901-83	DIODE 1SS83				
D716	8-719-901-83	DIODE 1SS83				
D717	8-719-901-83	DIODE 1SS83				
		<SOCKET>				
J701	⚠ 1-526-798-51	SOCKET, PICTURE TUBE				
		<COIL>				
L702	1-408-413-00	INDUCTOR	22UH			
L703	1-408-414-00	INDUCTOR	27UH			
L704	1-408-414-00	INDUCTOR	27UH			
L705	1-412-530-31	INDUCTOR	27UH			
L706	1-410-667-31	INDUCTOR	22UH			
		<TRANSISTOR>				
Q701	8-729-119-78	TRANSISTOR 2SC2785-HFE				
Q702	8-729-119-78	TRANSISTOR 2SC2785-HFE				
Q703	8-729-119-78	TRANSISTOR 2SC2785-HFE				
Q704	8-729-200-17	TRANSISTOR 2SA1091-O				
Q705	8-729-200-17	TRANSISTOR 2SA1091-O				
Q706	8-729-200-17	TRANSISTOR 2SA1091-O				
Q707	8-729-326-11	TRANSISTOR 2SC2611				
Q708	8-729-326-11	TRANSISTOR 2SC2611				
Q709	8-729-326-11	TRANSISTOR 2SC2611				
Q710	8-729-200-17	TRANSISTOR 2SA1091-O				
Q711	8-729-200-17	TRANSISTOR 2SA1091-O				
Q712	8-729-200-17	TRANSISTOR 2SA1091-O				
Q713	8-729-255-12	TRANSISTOR 2SC2551-O				
Q714	8-729-255-12	TRANSISTOR 2SC2551-O				
Q715	8-729-255-12	TRANSISTOR 2SC2551-O				
Q716	8-729-255-12	TRANSISTOR 2SC2551-O				
Q717	8-729-255-12	TRANSISTOR 2SC2551-O				
		<RESISTOR>				
R702	1-247-897-11	CARBON	560K	5%	1/4W	
R704	1-215-404-00	METAL	200	1%	1/4W	
R705	1-215-404-00	METAL	200	1%	1/4W	
R706	1-215-404-00	METAL	200	1%	1/4W	
R707	1-249-429-11	CARBON	10K	5%	1/4W	
R708	1-249-429-11	CARBON	10K	5%	1/4W	
R709	1-249-429-11	CARBON	10K	5%	1/4W	
R710	1-215-388-00	METAL	43	1%	1/4W	
R711	1-215-390-00	METAL	51	1%	1/4W	
R712	1-215-388-00	METAL	43	1%	1/4W	
R715	1-202-818-00	SOLID	1K	20%	1/2W	
R716	1-216-486-00	METAL OXIDE	8.2K	5%	3W	F
R717	1-202-818-00	SOLID	1K	20%	1/2W	
R718	1-216-486-00	METAL OXIDE	8.2K	5%	3W	F
R719	1-202-818-00	SOLID	1K	20%	1/2W	
R720	1-216-486-00	METAL OXIDE	8.2K	5%	3W	F
R722	1-202-883-11	SOLID	680K	20%	1/2W	
R723	1-202-838-00	SOLID	100K	20%	1/2W	
R724	1-202-842-11	SOLID	220K	20%	1/2W	
R725	1-202-838-00	SOLID	100K	20%	1/2W	
R726	1-202-846-00	SOLID	470K	20%	1/2W	
R727	1-202-842-11	SOLID	220K	20%	1/2W	
R728	1-202-837-00	SOLID	82K	20%	1/2W	
R729	1-202-549-00	SOLID	100	20%	1/2W	
R730	1-202-842-11	SOLID	220K	20%	1/2W	
R731	1-249-409-11	CARBON	220	5%	1/4W	
R732	1-249-409-11	CARBON	220	5%	1/4W	
R733	1-249-409-11	CARBON	220	5%	1/4W	
R734	1-249-409-11	CARBON	220	5%	1/4W	F
R735	1-249-409-11	CARBON	220	5%	1/4W	F
R736	1-249-409-11	CARBON	220	5%	1/4W	F
R737	1-247-807-31	CARBON	100	5%	1/4W	
R738	1-247-807-31	CARBON	100	5%	1/4W	
R739	1-247-807-31	CARBON	100	5%	1/4W	
R740	1-249-433-11	CARBON	22K	5%	1/4W	F
R741	1-249-433-11	CARBON	22K	5%	1/4W	F
R742	1-249-433-11	CARBON	22K	5%	1/4W	F
R744	1-249-423-11	CARBON	3.3K	5%	1/4W	
R745	1-249-429-11	CARBON	10K	5%	1/4W	
R746	1-215-879-11	METAL OXIDE	47K	5%	1W	F
R747	1-247-725-11	CARBON	10K	5%	1/4W	F
R748	1-249-923-11	CARBON	1K	5%	1/4W	F
R749	1-215-902-11	METAL OXIDE	47K	5%	2W	F
R751	1-247-887-00	CARBON	220K	5%	1/4W	
R752	1-247-887-00	CARBON	220K	5%	1/4W	
R753	1-247-887-00	CARBON	220K	5%	1/4W	
R754	1-247-863-91	CARBON	22K	5%	1/4W	
R755	1-249-434-11	CARBON	27K	5%	1/4W	
R756	1-249-440-11	CARBON	82K	5%	1/4W	
R760	1-249-400-11	CARBON	39	5%	1/4W	F
		<VARIABLE RESISTOR>				
RV708	⚠ 1-230-619-11	RES, ADJ, METAL GLAZE 110M				
RV709	1-226-114-00	RES, ADJ, METAL GLAZE 2.2M				
		**********				
	*A-1372-094-A	H BOARD, COMPLETE				
		**********				
	*4-348-208-00	HOLDER, LED				
		<CONNECTOR>				
CN105	*1-564-527-11	PLUG, CONNECTOR 12P				
CN106	*1-564-526-11	PLUG, CONNECTOR 11P				
		<DIODE>				
D2102	8-719-920-05	DIODE SLP231C-50				
D2103	8-719-812-32	DIODE TLY123				
D2104	8-719-901-33	DIODE 1SS133				
		<RESISTOR>				
R2101	1-249-419-11	CARBON	1.5K	5%	1/4W	
R2107	1-249-430-11	CARBON	12K	5%	1/4W	
R2137	1-249-414-11	CARBON	560	5%	1/4W	
R2138	1-249-414-11	CARBON	560	5%	1/4W	
R2139	1-249-414-11	CARBON	560	5%	1/4W	
R2140	1-249-414-11	CARBON	560	5%	1/4W	
R2141	1-249-414-11	CARBON	560	5%	1/4W	
R2142	1-249-414-11	CARBON	560	5%	1/4W	
R2143	1-249-414-11	CARBON	560	5%	1/4W	

H J S X

The components identified by shading and mark ⚠ are critical for safety.
Replace only with part number specified.

Les composants identifies par une trame et une marque ⚠ sont critiques pour la securite.
Ne les remplacer que par une piece portant le numero specifie.

REF.NO.	PART NO.	DESCRIPTION				REMARK
R2144	1-249-414-11	CARBON	560	5%	1/4W	
R2145	1-249-414-11	CARBON	560	5%	1/4W	
R2148	1-215-419-00	METAL	820	1%	1/4W	
R2149	1-215-414-00	METAL	510	1%	1/4W	
R2150	1-215-409-00	METAL	330	1%	1/4W	
R2151	1-215-407-00	METAL	270	1%	1/4W	
R2152	1-215-404-00	METAL	200	1%	1/4W	
R2153	1-215-401-11	METAL	150	1%	1/4W	
R2154	1-215-399-00	METAL	120	1%	1/4W	
R2155	1-215-397-00	METAL	100	1%	1/4W	
R2156	1-215-421-00	METAL	1K	1%	1/4W	
R2157	1-215-416-00	METAL	620	1%	1/4W	
R2158	1-215-410-00	METAL	360	1%	1/4W	
R2159	1-215-405-00	METAL	220	1%	1/4W	
R2160	1-215-421-00	METAL	1K	1%	1/4W	
		<VARIABLE RESISTOR>				
RV2101	1-223-504-21	RES, VAR, CARBON 20K				
RV2103	1-223-735-11	RES, VAR, CARBON 20K				
RV2105	1-223-735-11	RES, VAR, CARBON 20K				
RV2109	1-223-735-11	RES, VAR, CARBON 20K				
RV2113	1-223-735-11	RES, VAR, CARBON 20K				
RV2117	1-223-504-21	RES, VAR, CARBON 20K				
		<SWITCH>				
S2101	1-570-101-41	SWITCH, KEY BOARD				
S2102	1-570-101-41	SWITCH, KEY BOARD				
S2103	1-570-101-41	SWITCH, KEY BOARD				
S2104	1-570-101-41	SWITCH, KEY BOARD				
S2105	1-570-101-41	SWITCH, KEY BOARD				
S2106	1-570-969-11	SWITCH, KEY BOARD				
S2107	1-570-969-11	SWITCH, KEY BOARD				
S2108	1-570-101-41	SWITCH, KEY BOARD				
S2109	1-570-969-11	SWITCH, KEY BOARD				
S2110	1-570-101-41	SWITCH, KEY BOARD				
S2111	1-570-101-41	SWITCH, KEY BOARD				
S2113	1-570-969-11	SWITCH, KEY BOARD				
S2114	1-570-969-11	SWITCH, KEY BOARD				
**********						
	*A-1388-166-A	J BOARD, COMPLETE				
		**********				
		<CONNECTOR>				
CN608	*1-695-561-11	PIN, CONNECTOR (PC BOARD) 7P				
		<SWITCH>				
S601	⚠1-692-921-11	SWITCH, PUSH (A.C. POWER)				
**********						
	*A-1390-391-B	S BOARD, COMPLETE (PVM-1953MD)				
		**********				
		<CAPACITOR>				
C805	1-102-978-00	CERAMIC	220PF	5%	50V	
C806	1-136-165-00	FILM	0.1MF	5%	50V	
C807	1-130-477-00	MYLAR	0.0033MF	5%	50V	
C810	1-136-165-00	FILM	0.1MF	5%	50V	
C811	1-136-165-00	FILM	0.1MF	5%	50V	
C812	1-136-495-11	FILM	0.068MF	5%	50V	
C813	1-124-907-11	ELECT	10MF	20%	50V	
C818	1-136-165-00	FILM	0.1MF	5%	50V	
		<CONNECTOR>				
CN801	*1-565-489-11	CONNECTOR, BOARD TO BOARD 13P				
		<IC>				
IC801	8-759-328-12	IC Z8622812PSC				
		<COIL>				
L801	1-410-470-11	INDUCTOR	10UH			
		<RESISTOR>				
R802	1-249-435-11	CARBON	33K	5%	1/4W	
R803	1-247-863-91	CARBON	22K	5%	1/4W	
R804	1-215-454-00	METAL	24K	1%	1/4W	
R805	1-215-461-00	METAL	47K	1%	1/4W	
R808	1-249-417-11	CARBON	1K	5%	1/4W	
R812	1-249-417-11	CARBON	1K	5%	1/4W	
R813	1-249-417-11	CARBON	1K	5%	1/4W	
R815	1-249-423-11	CARBON	3.3K	5%	1/4W	
R816	1-249-418-11	CARBON	1.2K	5%	1/4W	
R817	1-249-418-11	CARBON	1.2K	5%	1/4W	
R818	1-249-418-11	CARBON	1.2K	5%	1/4W	
R819	1-249-418-11	CARBON	1.2K	5%	1/4W	
R820	1-249-422-11	CARBON	2.7K	5%	1/4W	
**********						
	*A-1390-498-A	X BOARD, COMPLETE				
		**********				
		<CONNECTOR>				
CN108	*1-564-518-11	PLUG, CONNECTOR 3P				
		<DIODE>				
D001	8-719-301-36	DIODE SEL4410E-D				
D002	8-719-301-36	DIODE SEL4410E-D				
D003	8-719-301-36	DIODE SEL4410E-D				
D004	8-719-301-36	DIODE SEL4410E-D				
**********						
		MISCELLANEOUS				
		**********				
	⚠1-426-505-11	COIL, DEMAGNETIZATION				
	⚠1-451-349-12	DEFLECTION YOKE (Y20FZA)				
	⚠1-532-745-11	FUSE,GLASS TUBE 3.15A/125V (PVM-1953MD)				
	⚠1-576-230-11	FUSE,(H.B.C.) 3.15A/250V (PVM-2053MD)				
	1-537-877-11	TERMINAL BOARD ASSY, I/O (Q BOARD)				
	1-544-063-12	SPEAKER				
	1-690-871-11	CABLE (MINI DIN) 8P				
V901	⚠8-736-122-05	PICTURE TUBE 20FZ2 (PVM-2053MD)				
	⚠8-736-126-05	PICTURE TUBE 20FZ-2 (PVM-2053MD)				
	⚠8-736-124-05	PICTURE TUBE 20FZ4 (PVM-1953MD)				
**********						

The components identified by shading and mark ⚠ are critical for safety.
Replace only with part number specified.

Les composants identifies par une trame et une marque ⚠ sont critiques pour la securite.
Ne les remplacer que par une piece portant le numero specifie.

REF.NO.	PART NO.	DESCRIPTION	REMARK
		ACCESSORIES AND PACKING MATERIALS	
		**********	
⚠	1-551-631-22	CORD, POWER 6.0A/250V (PVM-2053MD)	
⚠	1-559-945-11	CORD, POWER 10A/125V (PVM-1953MD)	
	1-690-871-11	CABLE (MINI DIN) 8P	
	3-170-078-01	HOLDER (B), PLUG	
	3-798-310-21	MANUAL, INSTRUCTION (PVM-1953MD)	
	3-798-310-41	MANUAL, INSTRUCTION (PVM-2053MD)	
	3-798-710-11	MANUAL, PROTOCOL	
*	4-043-769-01	CUSHION (UPPER) (ASSY)	
*	4-043-770-01	CUSHION (LOWER) (ASSY)	
	4-048-070-01	HINGE, COVER	
	4-048-072-01	COVER, CONTROL PANEL	
	4-048-073-01	COVER, DROP PROTECTION	
	4-048-145-01	MANUAL, INSTANT INFORMATION (PVM-1953MD)	
	4-048-145-11	MANUAL, INSTANT INFORMATION (PVM-2053MD)	
	4-048-176-01	SHEET, ADHESIVE	
*	4-048-225-01	INDIVIDUAL CARTON (PVM-1953MD)	
*	4-048-228-01	INDIVIDUAL CARTON (PVM-2053MD)	
*	4-048-421-01	SPACER	
*	4-381-155-01	BAG, PROTECTION	

9-920-602-01

Sony Corporation
B & I Systems Company

English
95BZ24135-1
Printed in Japan
©1995. 2